Powered by invermac TECHNOLOGY

inverFLOW PLUS



Installation Manual

PLEASE READ THE MANUAL CAREFULLY BEFORE INSTALLATION & OPERATION AND RETAIN IT FOR FUTURE REFERENCE.

Adherence to the directions for use in this manual is extremely important for health and safety. Failure to strictly adhere to the requirements in this manual may result in personal injury, property damage and affect your ability to make a claim under the manufacturer's warranty provided with your product. Products must be used, installed and operated in accordance with this manual. You may not be able to claim on the manufacturer's warranty in the event that your product fault is due to failure to adhere to this manual.

1. IMPORTANT SAFETY INSTRUCTIONS

This guide provides installation and operation instructions for this pump.
If you have any other questions about this equipment, please consult your supplier.

1.1 When installing and using this electrical equipment, basic safety precautions should always be followed, including the following:

RISK OF ELECTRICAL SHOCK.
Pool pump must be installed on a RCD protected circuit. Check your local state regulations and wiring rules.

This water pump must be earthed in accordance with local and national regulations. Earthing point is clearly labelled on pump

This pump is for use with permanently installed in-ground or above-ground swimming pools and may also be used with hot tubs and spas with a water temperature under 50°C. Due to the fixed installation method, this pump is not suggested to be used on above-ground pools that can be readily disassembled for storage.

The pump is not submersible.

Never open the inside of the drive motor enclosure.

1.2 All installations must be fitted with earth leakage or residual current protection devices, having a rated residual operating current not exceeding 30mA.

Fill the pump with water before starting. Do not run the pump dry. In case of dry run, mechanical seal will be damaged and the pump will start leaking.

Before servicing the pump, switch OFF power to the pump by disconnecting the main circuit to the pump and release all pressure from pump and piping system.

Never tighten or loosen screws while the pump is operating.

Ensure that the inlet and outlet of the pump are unblocked with foreign matter.

This pump must be equipotential bonded to local and national regulations.

WARNING:

- Fill the pump with water before starting. Do not run the pump dry. In case of dry run, mechanical seal will be damaged and the pump will start leaking.
- Before servicing the pump, switch power OFF to the pump by disconnecting the main circuit to the pump and release all pressure from pump and piping system.
- Never tighten or loosen screws while the pump is operating.
- Ensure that the inlet and outlet of the pump are unblocked with foreign matter.

CONTENTS

1 IMPORTANT SAFETY INSTRUCTIONS	2
2 TECHNICAL SPECIFICATIONS	4
3 OVERALL DIMENSION	4
4 INSTALLATION	4
4.1 Tools required	4
4.2 Pump location	5
4.3 Piping	5
4.4 Valve and fittings	5
4.5 Check before initial setup	5
4.6 Application conditions	5
5 SETTING AND OPERATION	6
5.1 Display on control panel	6
5.2 Startup	6
5.3 Self-priming	6
5.4 Running capacity setting	7
5.5 Timer mode	7
5.6 Skimmer mode	8
5.7 Parameter settings	8
6 WiFi FUNCTION	9
7 EXTERNAL CONTROL	14
7.1 Digital input	14
7.2 RS485	14
8 CONNECTING TO MADIMACK HEAT PUMP POOL HEATER	15
9 PROTECTION AND FAILURE	16
9.1 High temperature warning and speed reduction	16
9.2 Undervoltage protection	16
9.3 Troubleshooting	16
9.4 Error code	16
10 MAINTENANCE	17
11 DISPOSAL	17

2 | TECHNICAL SPECIFICATIONS

MODEL	InverFlow Plus 1HP	InverFlow Plus 1.5HP	InverFlow Plus 2HP
SKU	20101	20102	20103
Power			
Voltage range		220~240 50/60Hz	
Total Horse Power (THP)	1	1.5	2
Input kilowatt (kW)	0.75	1.05	1.5
Running Amps (A)	3.5	4.6	6.5
Flow			
Qmax L/Min	367	425	517
Hmax - Metre	16	18	20.5
Flow @ 8m (L/min)	300	367	500
Flow @ 10m (L/min)	233	300	467
Specifications			
Dimensions LxWxH (mm)		544*252*288	
Pipe connections (mm)		40 & 50mm	
Noise level 30% Speed	35.4	35.4	36
Noise level 100% Speed	51.4	54.9	57.5
Packaging (mm)		610*255*348	

* Specifications displayed refer to 230v supply and can vary with voltage fluctuations please visit www.madimack.com for further specifications.
2 years warranty for product installed in commercial application

3| OVERALL DIMENSION

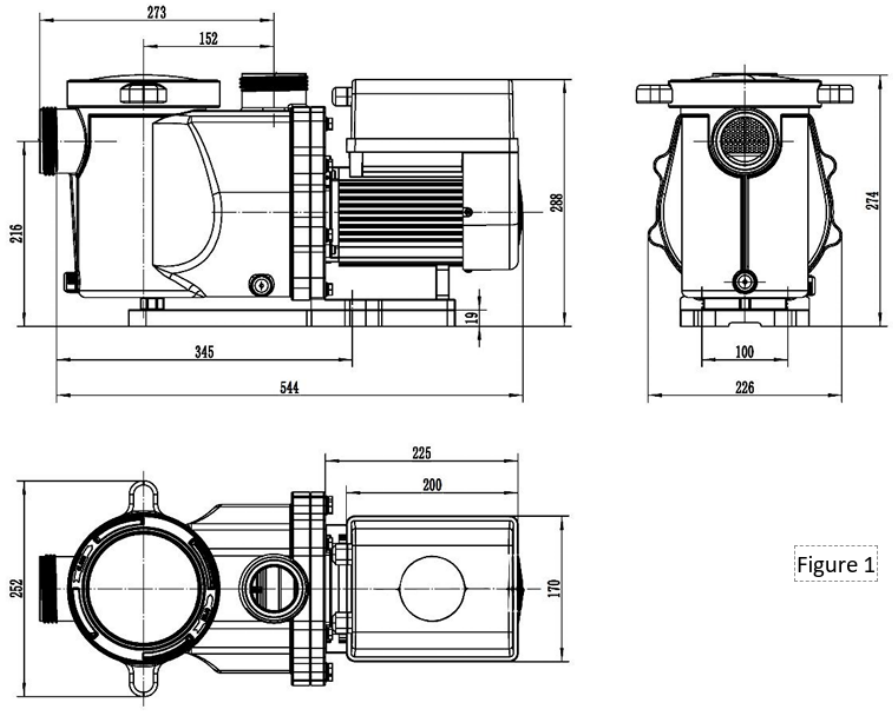

Figure 1

4 | INSTALLATION

1. Tools required

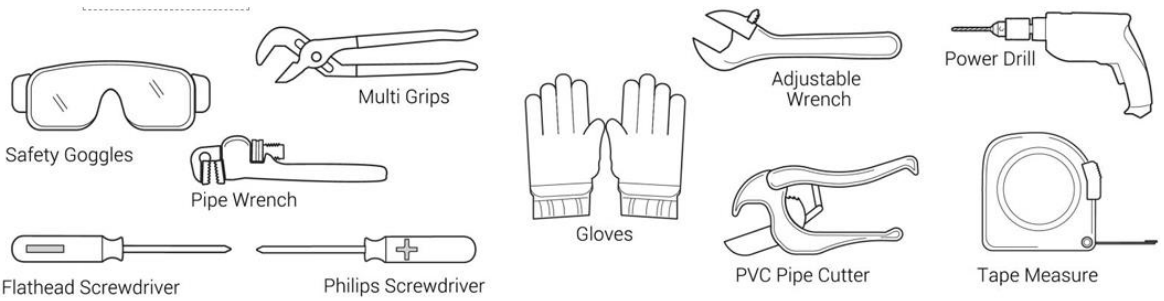

4.2 Pump Location

The pump should be installed in an area with at least 6” distance around the unit away from any obstacles and away from any corrosive products.

1) Install the pump as close to the pool as possible, to reduce friction loss and improve efficiency, use short, direct suction and return piping.
2) To avoid direct sunshine, heat or rain, it is recommended to place the pump indoors or in the shade.
3) DO NOT install the pump in a damp or non-ventilated location. Keep pump and motor at least 6” away from obstacles, pump motors require free circulation of air for cooling.
4) The pump should be installed horizontally and fixed in the hole on the support with screws to prevent unnecessary noise and vibration.

4.4 Valves and Fittings

It is recommended to install isolation valves on the suction and return lines for easier maintenance of the pool pump.
Elbows should be no closer than 14” to the inlet.
Do not install 90° elbows directly into the pump inlet/outlet.
Joints must be tight.

4.3 Piping

Suction and return connections on the pool pumps are 2” pressure pipe dimensions.

1) For optimization of the pool plumbing, it is recommended to use a pipe with size of 2”. When installing the inlet and outlet fittings Qoints),use the special sealant for PVC material.
2) The dimension of suction line should be the same or larger than the inlet line diameter, to avoid pump sucking air, which will affect the efficiency of the pump.
3) Plumbing on the suction side of the pump should be as short as possible.
4) For most installations we recommend installing a valve on both the pump suction and return lines, which is more convenient for routine maintenance. However, we also recommend that a valve, elbow, or tee installed on the suction line should be no closer to the front of the pump than seven times the suction line diameter
5) Pump outlet piping system should be equipped with a check valve to prevent the pump from the impact of medium recirculation and pump-stopping water hammer.

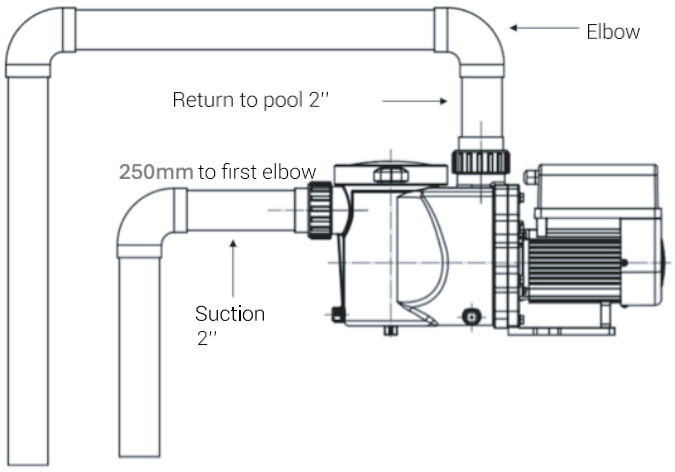

* The pump inlet/ outlet union size: optional with imperial 1.5” or 2”.

2) Below water level system should have an isolation valves installed on suction and return line for maintenance;
Ihowever, the suction gate valve should be no closer than seven times the suction pipe diameter as described in this section.

3) A check valve should be installed if there are long pipe runs above water level or if is significant height between the return line and the outlet of the pump.

4) Be sure to install check valves when plumbing in parallel with other pumps. This helps prevent reverse rotation of the impeller and motor.

4.5 Check before initial startup

1) Check whether pump shaft rotates freely;
2) Check whether power supply voltage and frequency conform to the nameplate;
3) Facing the fan blade, the direction of motor rotation should be clockwise;
4) It is forbidden to run the pump without water.

4.6 Application Conditions:

Ambient Temperature	Installation temperature range 25.5°C - 40°C
Water Temperature	5°C - 50°C
Salt Pools	<6000ppm recommended
Humidity	≤90%RH,
Altitude	Not exceed 1000m
Priming	<2m
Insulation	Class F, IP55

5 | SETTING AND OPERATION

1. Display on control panel

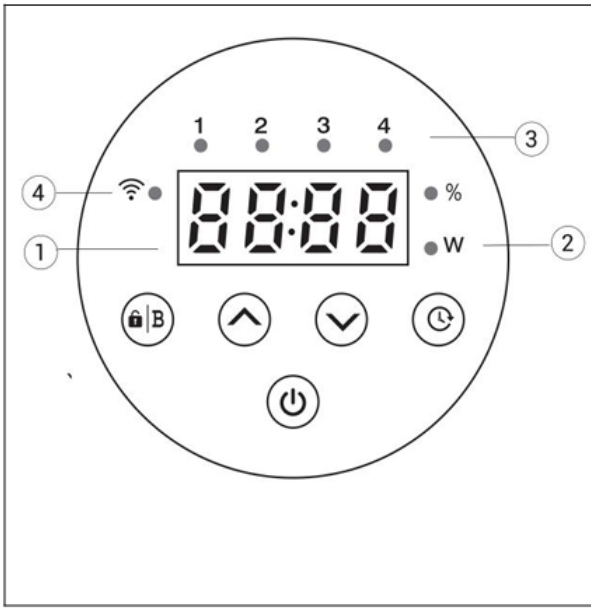

1	Running capacity / power display
2	Running capacity / power indicator
3	Timer indicator 1/2/3/4
4	Wifi indicator (Optional Item)
	Unlock/Boost
	Up/Down to change the value of the settings
	Timer setting
	On/Off

5.2 Startup

When the power is switched on, the screen will fully light up for 3 seconds, the device code will be displayed, and then it will enter the normal working state. When the screen is locked, only the button will light up; Press and hold. for more than 3 seconds to unlock the screen.

The screen will automatically lock up when there is no operation for more than 1 minute and the brightness of the screen will be reduced to 1/3 of the normal display. Short press to wake up the screen and observe the relevant operating parameters.

5.3 Self-priming

Each time the pump is started, it will start self-priming.

When the pump performs self-priming, it will count down start from 25mins display 00:25 and stop count down automatically when the system detects the pump is full of water, then the system will recheck for 2mins display 00:02 again to make sure the self-priming is completed.

User can exit self-priming manually by pressing for more than 3 seconds. The pump will run at the default 80% speed

Remark:

1) The pump is delivered with self-priming enabled. Each time the pump restarts, it will perform self-priming automatically. Users can enter the parameter setting to disable the default self-priming function in parameter 6(see 5.8)
2) Users can enter the parameter setting to adjust the self-priming recheck time in parameter 7 (see 5.8)

5.4 Running Capacity Setting

1		Hold for more than 3 seconds to unlock the screen.
2		Press to start. The pump will run at 80% of the running capacity at the initial startup after the self-priming.
3		Press or to set the running capacity between 30%~100%, each step by 5%. For the purpose of backwashing, users can set a high running capacity according to the size of filter.
4		Hold for more than 3 seconds to read the real-time power.

Note:
a. When the running capacity is adjusted, the system will save the latest parameter automatically.
b. When setting 100% speed, the pump will increase the speed automatically if the pipeline resistance is high, but will not exceed the rated power of each model.

5.5 Timer mode

The pump's on/off and running capacity could be commanded by timer, which could be programmed daily as needed. Maximum 4 timers can be set on the control panel.

1	Enter timer setting by pressing .
2	Press or to set the local time. Press to confirm and move to timer-1
3	When enter the timer-1 setting, the timer indicator 1 will light up. "StA"will be shown on the screen. Press to proceed and then press or to set the start time of timer-1 (with 30 minutes for each step), press to confirm.
4	When the start time of timer 1 is confirmed, "End"will be shown on the screen. Press to proceed and then press or to set the end time of timer-1 (with 30 minutes for each step), press to confirm.
5	When the end time of timer 1 is confirmed, "SPd"will be shown on the screen. Press to proceed and then press or to set the running capacity of timer-1 (30% - 100%, each step by 5%), press to confirm.
6	When the timer 1 setting is completed, repeat steps 3 – 5 to complete the setting of timer 2 – 4.

Note:
1). When timer mode is activated, if the set time period contains the current time, the pump will start running according to the set running capacity and the corresponding timer indicator (7 or 2 or 3 or 4) will stay on, and the set running capacity will be shown on the screen.
2).If the set time period does not contain the current time, the timer indicator (7 or 2 or 3 or 4) that is about to start running will light up and flash, and the current time will be shown on the screen.
3).All 4 time periods should be set in chronological order. Overlap setting of time will be considered invalid, the pump will only run based on the previous valid setting.
4).During the timer setting , if users want to return to the previous setting item, hold both for 3 seconds. If users don't need 4 timers, they can hold for 3 seconds after completing the setting of the specific timer, the system will automatically save the current set value and activate the timer mode.
5).When the timer mode is activated, users can adjust the running capacity for temporary use by pressing or until the set time period of the timer end.
1. If the set time period of the timer contains the current time, users can adjust the running capacity for temporary use by pressing or until the set time period of the timer end.
2. If the set time period of the timer does not contain the current time, users can adjust the running capacity for temporary use by pressing or until the next set time period of the timer start.
6).Users can hold for 3 seconds to read the real-time power and exit timer mode by holding for 3 seconds.

5.6 Boost mode

User can enter the Boost mode by short pressing . The pump will run at 100% speed for 1 hour (the speed can be modified in parameter setting 4, and the countdown will be displayed on the display. (see 5.8)
During operation, the user can adjust the running time (default 1 hour) by pressing both . The adjustment range is 00:00-24:00, and the step is 15 minutes. After adjustment, the system automatically saves the current value and operates according to the adjusted time, and the next time it enters the Boost mode, it will still run according to the last set time value.
When the countdown ends, or hold for 3 seconds, the boost mode will be exited and the pump wil return to the previous running state.

5.7 Skimmer mode

The skimmer mode enables the pump to skim the water surface, prevents the debris from accumulating, and provides users with a cleaner pool.

Hold and to enter the preset interface of the skimmer mode, press or to view the 3 presets, the selected preset will be

Activate Skimmer Mode:

1. Unlock the screen, press both for 3s to enter the preset interface of the skimmer mode;
2. Press or to select the presetting from 1-4, the selected presetting will be activated after 5s without operation.
3. When skimmer mode is activated, the controller will exit the preset interface and display normal running state.

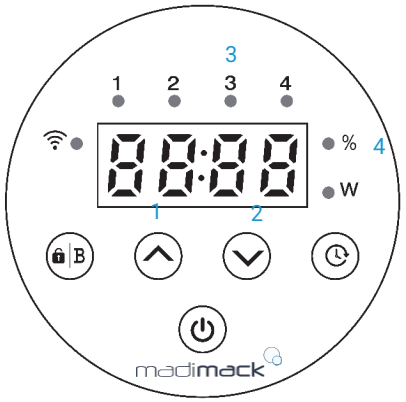

1. Skimmer cycle (hour)
2. Skimmer duration (minute)
3. Skimmer mode preset number
4. Skimmer speed

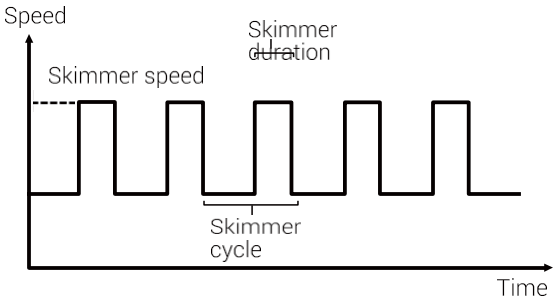

Details of the presetting:

Preset	Skimmer cycle	Skimmer duration	Skimmer speed	Time period	Remarks
1	1h	3 min	100%	7:00 - 21:00	Editable in parameter setting
2	1h	10 min	100%	7:00 - 21:00	Not editable
3	3h	3 min	80%	7:00 - 21:00	Not editable
4	Cancel the skimmer mode				Not editable

5.8 Parameter Setting

Restore factory setting.	Under off mode, hold both for 3 seconds.
Check the software version.	Under off mode, hold both for 3 seconds.
Enter parameter setting as shown.	Under OFF mode, hold both for 3 seconds to enter the parameter setting. The parameter address (on the left) and default setting value (on the right) will flash alternately on the screen. Users can press or to adjust the current value, and hold for 3 seconds to the next parameter address. It will exit the parameter setting after 10 seconds without operation.

Parameter Address	Description	Default Setting	Setting Range
1	Digital input 2	100%	30~100%, by 5% increments
2	Digital input 3	80%	30~100%, by 5% increments
3	Digital input 4	40%	30~100%, by 5% increments
4	Boost mode speed	100%	80~100%, by 5% increments
5	Reserve	/	/
6	Enable or disable the priming that occurs at start.	25	25:enables 0:disables
7	Self-primming recheck time	2min	1-15min by 1min increments
8	System time	00:00	Hour: 0-24h, step:1h Min: 0-59min, step 1min
9	Skimmer cycle time, execution time, execution speed (Preset 1)	01 : 00 00 : 03 100%	Cycle range : 1-24h, by 1h increments Execution time Range: 1-30min, by 1min increments execution time Range: 30%-100%, by 5% increments
10	Skimmer mode effective period (Preset 1)	07:00-21:00	Start time: hour: 0-24h, by1h; Minute: 0-59min, by 1min End time: hour: 0-24h, by 1h; Minute: 0-59min, by 1min
11	Speed limit	100%	60-100% in step of 5%
12	RS485 address	170 (0xAA	160-191(0xA0-0xBF), by 1increments
13	Reserve	)	/
		/	

1. Download Madimack APP

Android

ANDROID APP ON Google play

iOS

Available on the App Store

2. Account Registration

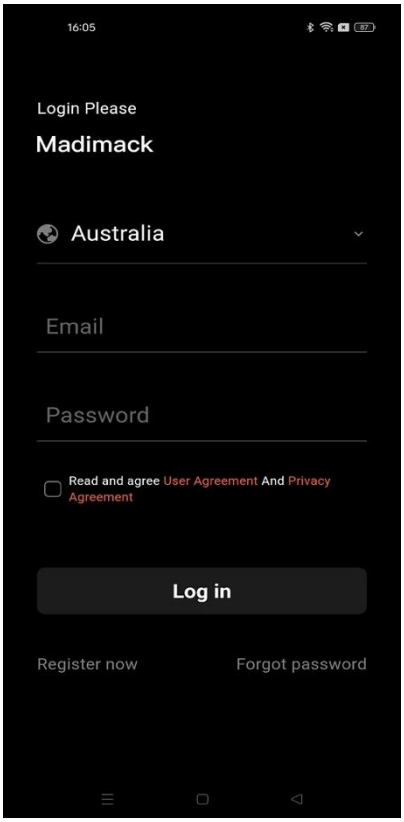

Phone / Email Registration

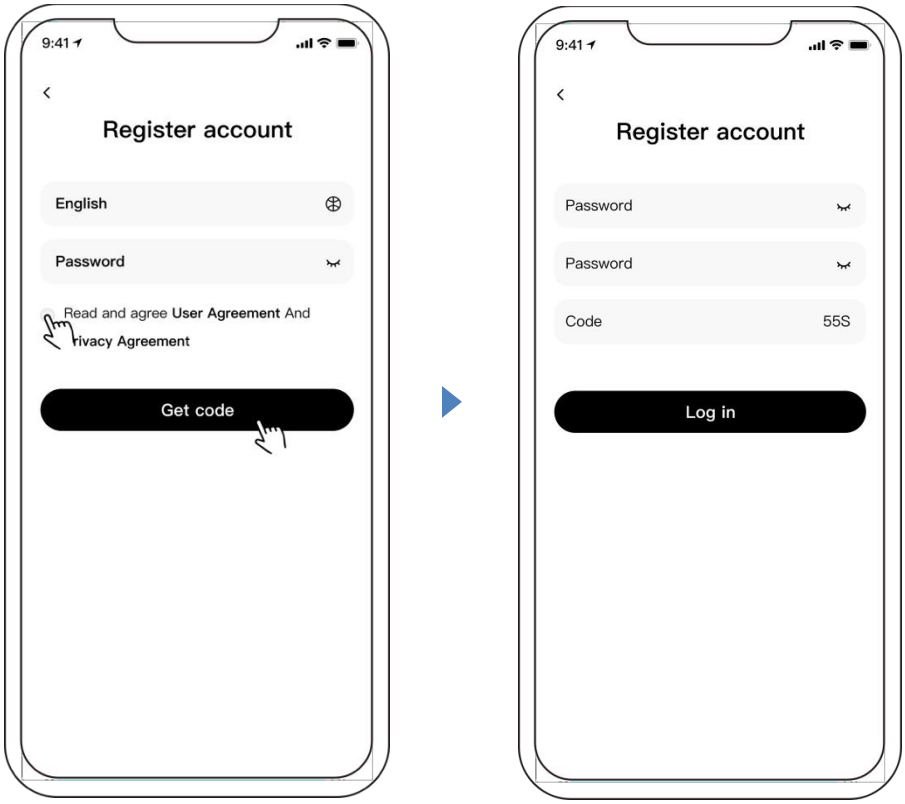

3. App Pairing

Please make sure your pump is turned on before you start.
(Network condition: 2.4GHz; 2.4Ghz and 5GHz combine into one SSID; but no separate 5GHz network)

1. Please confirm that your phone is connected to Wifi and the Bluetooth of your phone is ON.
2. Press. for 3 seconds to unlock the screen. After switching on the pump, press for 5 seconds until hearing “Beep” and then release. will flash.
3. Click “Add Device”, and then follow the instructions to pair device.

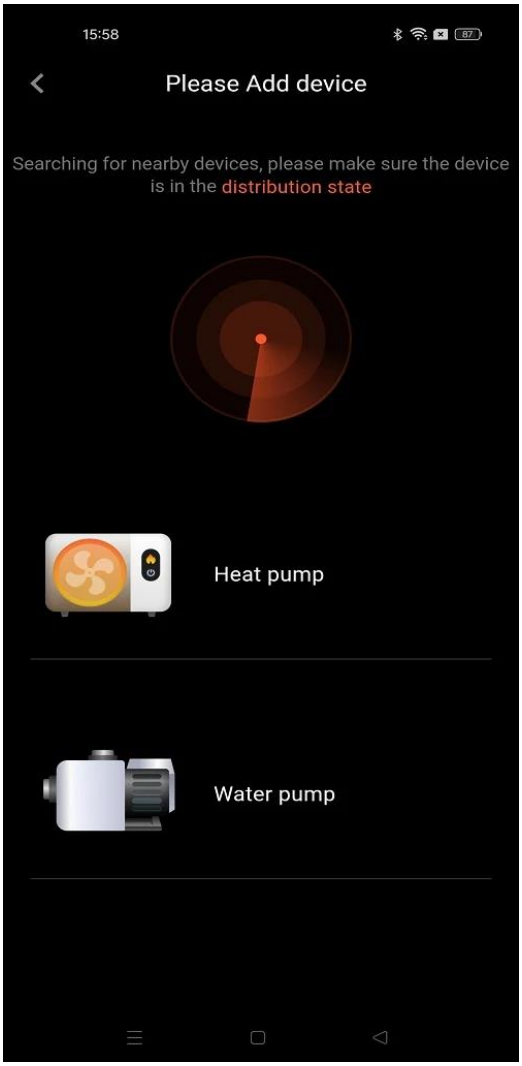

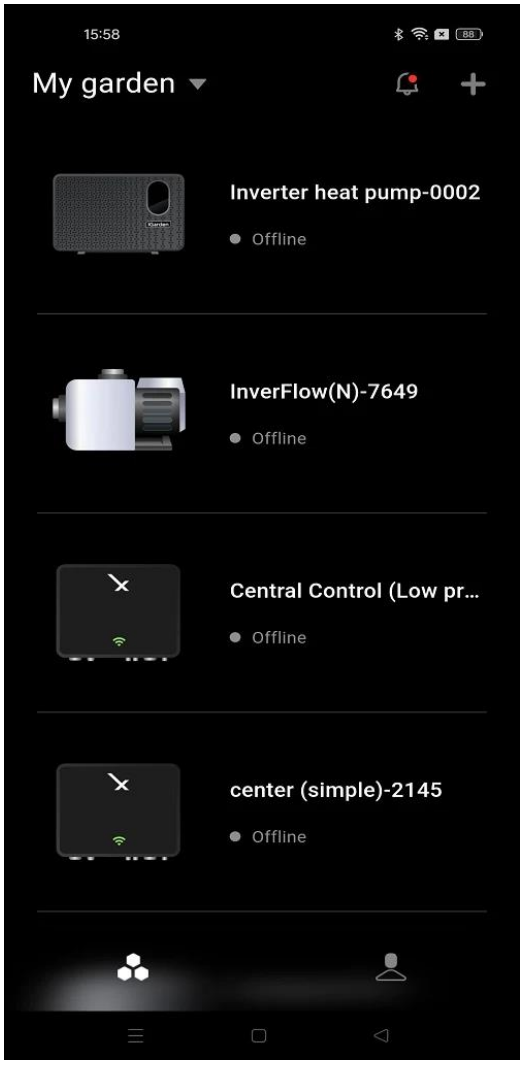

4. Operation

1) Manual Inverter mode（MI mode）:

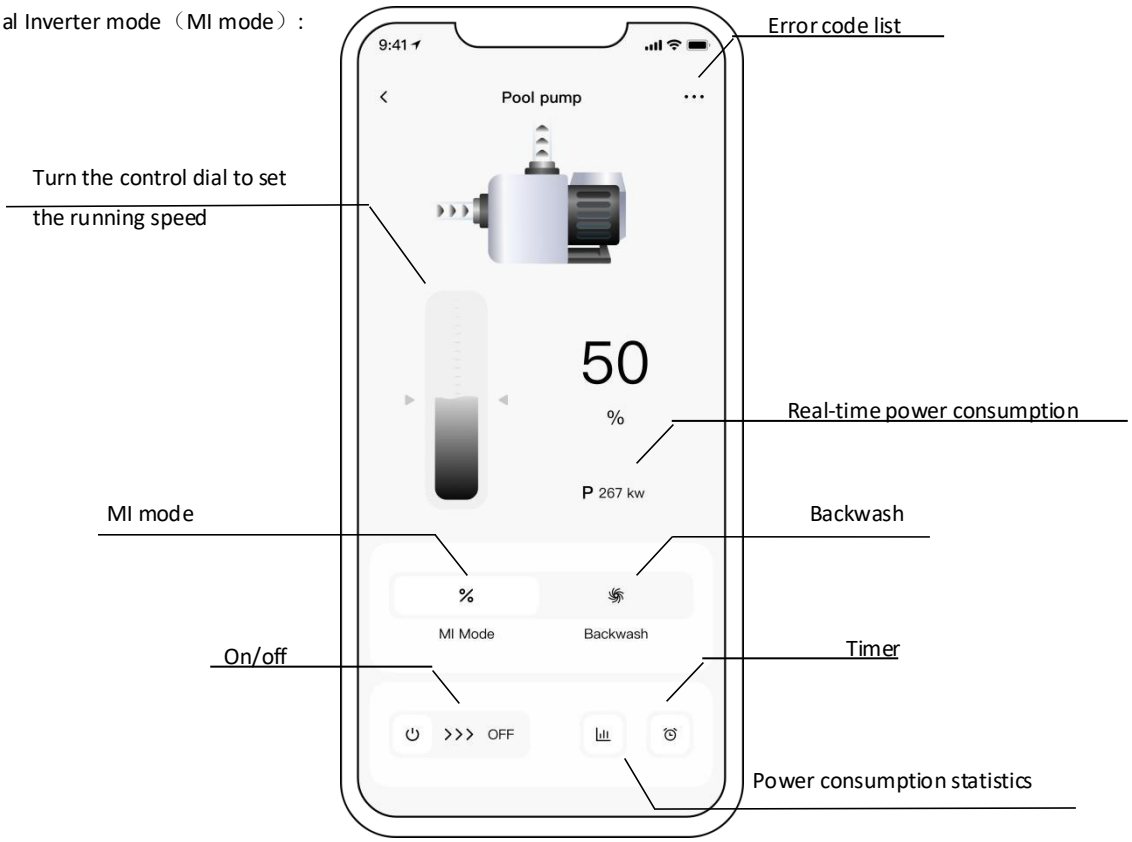

2) Backwash mode :

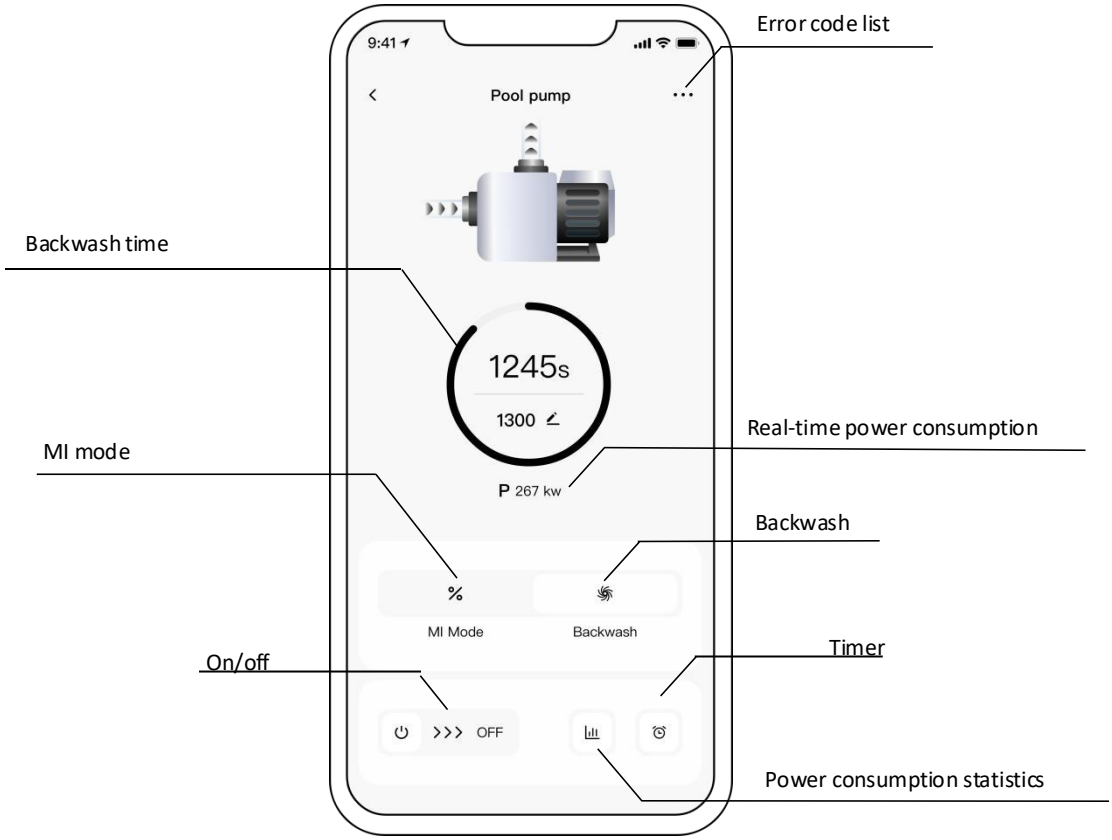

Notice for the timer setting via the APP:

1) Time variance is ±30s;

2) In order to avoid overlapping timing points conflicting and invalidating due to a network delay, it is recommended that the end time and the start time of the next timing period cannot overlap, and a sufficient time interval should be reserved, for example, at least 1-2 minutes;

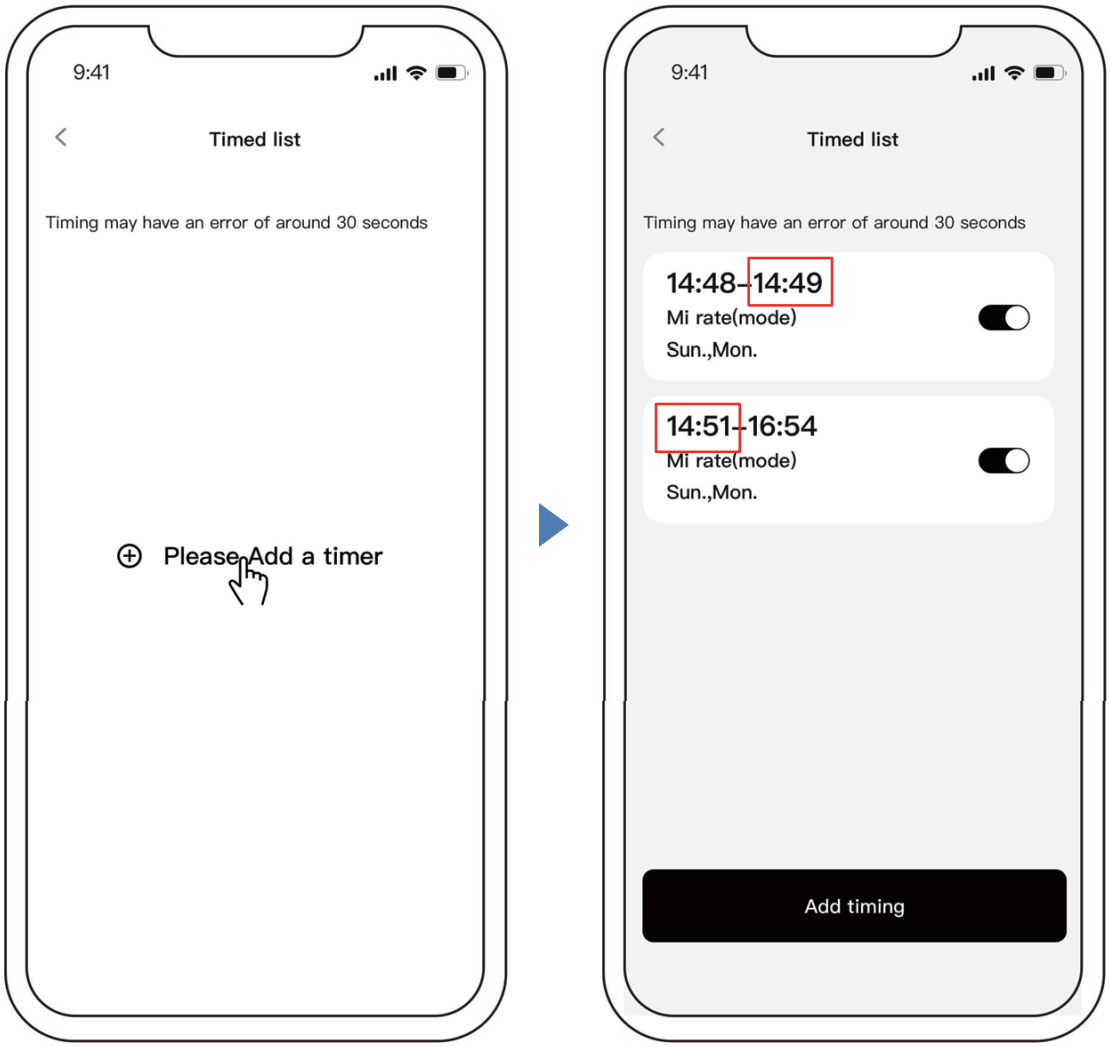

5. Sharing Devices with your family members

After pairing, if your family members also want to control the device, please let your family members register" iGarden" first, and then the adminstrator can operate as below:

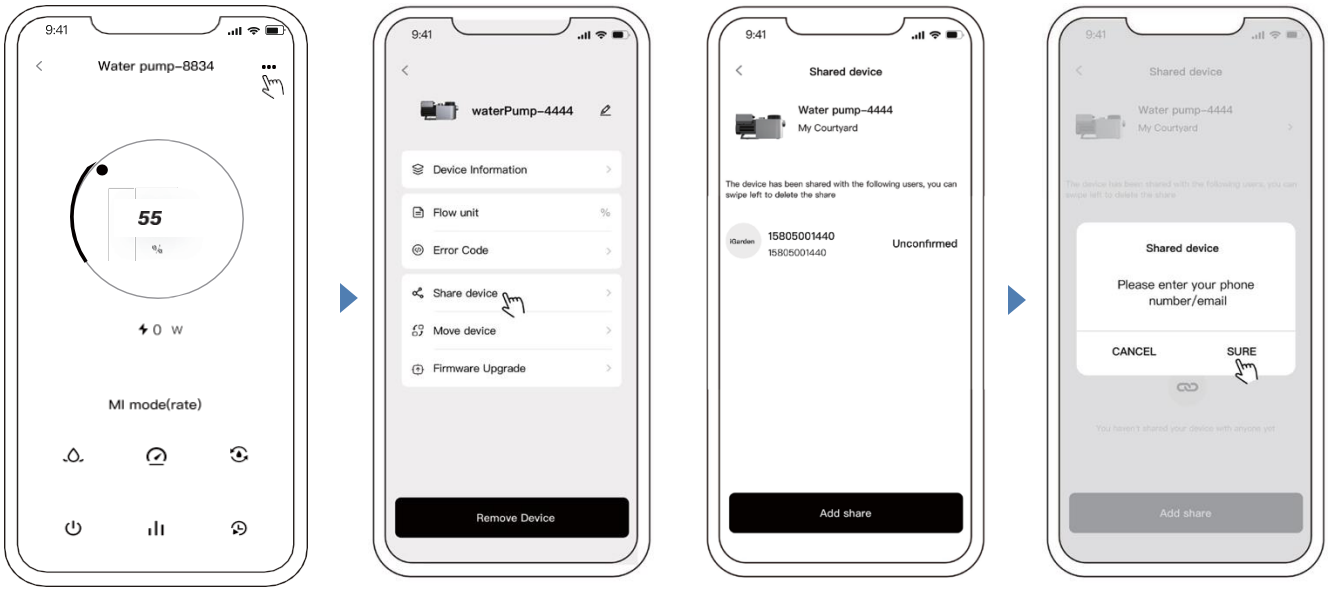

6. Feedback

If you have any problem while using, welcome to send feedback.

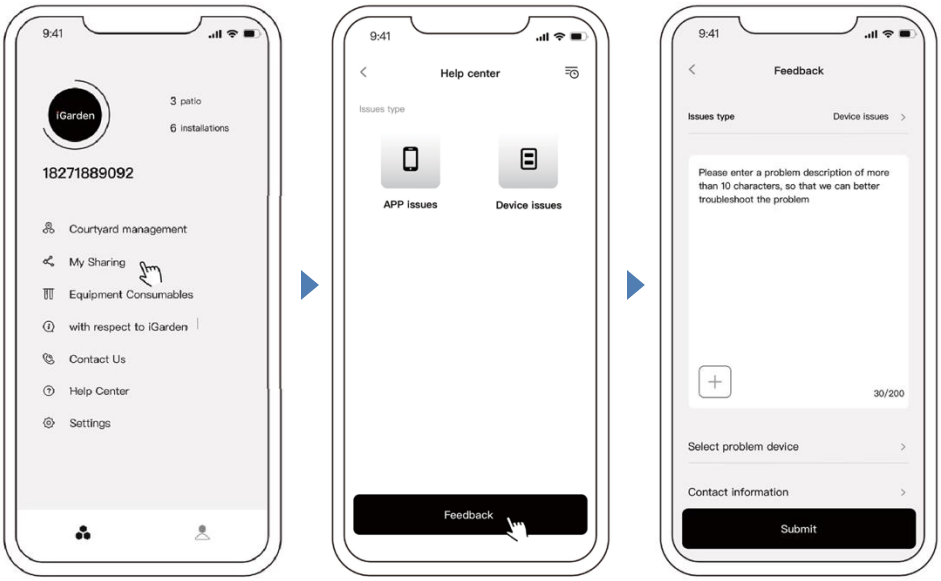

Notice:

1) Weather forecast is just for reference;
2) The power consumption data is for reference only, as it may be affected by network problems and imprecision of the calculation.
3) App is subject to updates without notice.

7 | EXTERNAL CONTROL

External control can be enabled via following contacts. If more than one external control is enabled, the priority is as below: Digital Input>RS485 > panel.

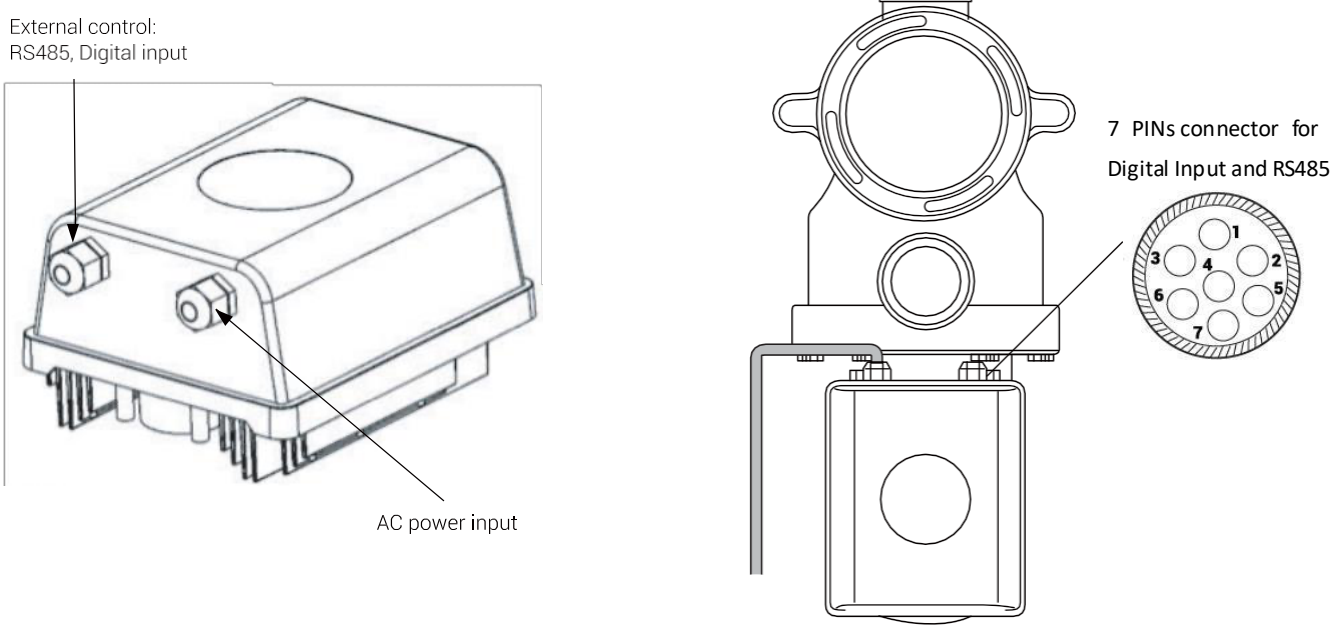

Color	Description	Setting Range	Default Setting
White	Digital Input 2	30-100%, by 5% increments	100%
Black	Digital Input 3	30-100%, by 5% increments.	80%
Red	Digital Input 4	30-100%, by 5% increments	40%
Grey	Digital Input 1	30-100%, by 5% increments	100%
Yellow	Digital Ground		COM
Green	RS 485-A		
Brown	RS 485-B		

1. Digital inputs

- Running capacity is determined by the state of the active Digital Input
  - i.e. When Digital Input 2 is active, the pump will be forced to run at 100% (default).
- Digital Input 1 (grey+yellow) speed can be set directly on the controller while active.
- Digital Inputs 2, 3 & 4 speeds can be adjusted in the parameter menu (1, 2 & 3).

Note:

- When no digital inputs are active, the pump display will return to last known state and manual control through on board controller settings.

2. RS485

To connect with RS485-A and RS485-B, the pump could be controlled via Modbus 485 communication protocol.

8 . CONNECTING TO MADIMACK HEAT PUMP POOL HEATER

How to connect: *Only available on late 2022 Madimack models.*

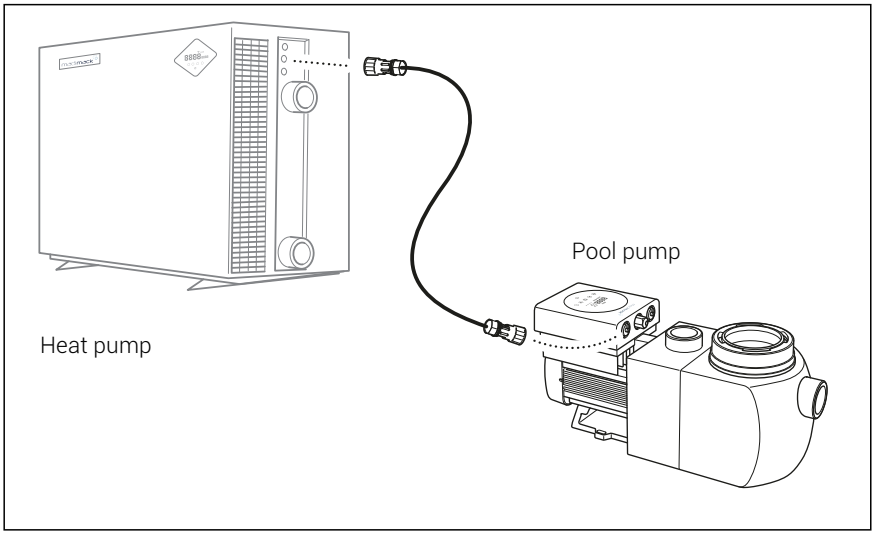

Socket

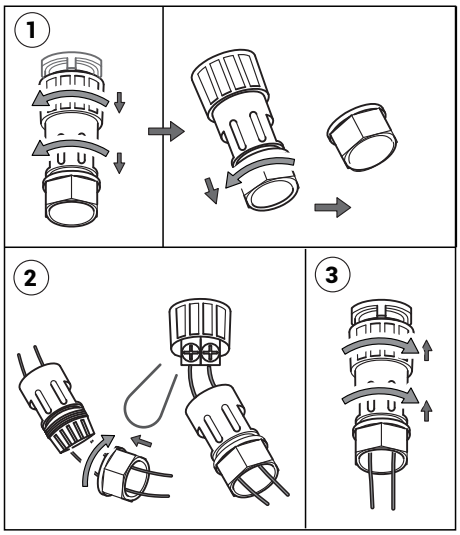

Adaptive Flow - Perfect Pairing with Madimack Pool Heat Pump

The Perfect Pairing uses the intelligent communicaiton functions of the pool heat pump to activate the speed required for the pool pump ensuring the most efficient solution for your pool and equipment.

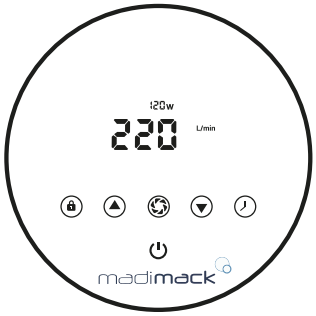



1. Switch pump off with ⏻ so only power symbol is illuminated.
2. Press and hold ▲ and ▼ arrows for 4 seconds on until "┇" is displayed.
3. Use the ▲ or ▼ arrow whilst on " ┇ " to adjust to the bottom number (**L/min**) optimum stated on the table on the right side.

Pool Heater kW size	Optimum Flow rate L/min
9-16	83
17-20	100
21-24	133
25-28	150
29-32	183
33-36	200
37-40	283

Note:
Communication cable '20031' is default wired for Di-1. This allows setting the 'heat pump' operating speed directly on the pump controller, without using parameter menu.
- While the digital input is active, the UP and DOWN buttons are setting the Di1 Active speed
- While the digital input is not active, the UP and DOWN buttons are setting the pump (standard filtration) speed

CUSTOMIZED SOCKET



P1/P2:
Sticker "Pump Output E.L.V"

5/6：
Sticker "Control Input"

Use the "Pump Output ELV" socket to connect to plug on water pump.

9 | PROTECTION AND FAILURE

1. High Temperature Warning and Speed Reduction

During normal operation (except backwash/self-priming), when the pump control system reaches the high temperature warning trigger threshold (81°C), it enters the high temperature warning state; when the temperature drops from the high temperature warning release threshold (22.5°C), the high temperature warning state is released. The display area alternately displays AL0l and running speed.

1) If AL0l displayed for the first time, the running capacity will be automatically reduced as below:
a. If current operating capacity is higher than 85%, the running capacity will be automatically reduced by 15%;
b. If current operating capacity is higher than 70%, the running capacity will be automatically reduced by 10%;
c. If current operating capacity is lower than 70%, the running capacity will be automatically reduced by 5%.

2) Suggestion for non-first displayed of AL0l: check the module temperature every 2 minutes. Compared with the temperature in the previous period, for every 1-degree Celsius increase, the speed will decrease by 5%.

9.2 Undervoltage protection

1)When pump is running under 230V:
When the device detects that the input voltage is less than 197V, the device will limit the current running speed.
When input voltage is less than or equal to 180V, the running capacity will be limited to 70%;
When the input voltage range is within 180V ~ 190V, the running capacity will be limited to 75%;
When the input voltage range is within 190V ~ 197V, the running capacity will be limited to 85%.
The display area alternately displays AL02 and running speed.

2) When pump is running under 115V:
When the device detects that the input voltage is less than 98V, the device will limit the current running speed.
When input voltage is less than 85V, pump will stop running automatically and display the Error code EOOl;
When the input voltage range is within 85V ~ 90V, the running capacity will be limited to 75%;
When the input voltage range is within 90V ~ 98V, the running capacity will be limited to 85%.
The display area alternately displays AL02 and running speed

9.3 Troubleshooting

Problem	**Possible causes and solution**
Pump does not start.	• Power Supply fault, disconnected or defective wiring. • Fuses blown or thermal overload open. • Check the rotation of the motor shaft for free movement and lack of obstruction. • Because of long time lying idle. Unplug the power supply and manually rotate motor rear shaft a few times with a screwdriver.
Pump does not prime.	• Make sure the pump basket is filled with water and the O-ring of cover is clean. • Loose connections on the suction side. • Strainer basket or skimmer basket loaded with debris. • Suction side clogged. • Distance between pump inlet and liquid level is higher than 2m, height of pump installation should be lowered.
Low Water Flow.	• Pump does not prime. • Air entering suction piping. • Basket full of debris. • Inadequate water level in pool.
Pump being noisy	• Air leak in suction piping, cavitation caused by restricted or undersized suction line or leak at any joint, low water level in pool, and restricted discharge return lines. • Vibration caused by improper installation, etc. • Damaged motor bearing or impeller (need to contact the supplier for repair).

10 | MAINTENANCE

Empty the strainer basket frequently. The basket should be inspected through the transparent lid and emptied when there is an evident stack of rubbish inside. The following instructions should be followed:

1) Disconnected the power supply.
2) Unscrew the strainer basket lid anti-clockwise and remove.
3) Lift up the strainer basket.
4) Empty the trapped refuse from the basket, rinse out the debris if necessary.

Note: Do not knock the plastic basket on a hard surface as it will cause damage

5) Inspect the basket for signs of damage, replace it.
5). Check the lid O-ring for stretching, tears, cracks or any other damage
7). Replace the lid, hand tightening is sufficient.

Note: Periodically inspect and clean the strainer basket will help prolong its life.

11 | DISPOSAL

Observe all safety and warning information during installation and operation.

DISPOSAL CONSIDERATIONS
The transport and protective packaging has been selected from materials which are environmentally friendly for disposal, and can normally be recycled. Recycling the packaging reduces the use of raw materials in the manufacturing process and also reduces the amount of waste in landfill sites. Ensure that any plastic wrappings, bags etc. are disposed of safely and kept out of the reach of babies and young children. Danger of suffocation.

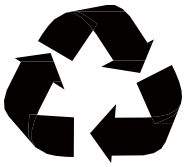

DISPOSING OF YOUR ELECTRICAL PRODUCT
Electrical devices marked with this label may not be disposed of in domestic waste at the end of their service life.

Electrical and electronic appliances often contain valuable materials. They also contain specific materials, compounds and components, which were essential for their correct function and safety. These could be hazardous to human health and to the environment if disposed of with your domestic waste or if handled incorrectly. Please do not, therefore, dispose of your old appliance with your household waste.



Please dispose of those materials by contacting your local authorities and ask for the correct method of disposal. Please ensure that your old appliance poses no risk to children while being stored prior to disposal. By disposing of this product in accordance with the regulations, you protect the environment and the health of -those around you from negative consequences.

madimack

Madimack Manufacturer's Warranty

This is a warranty against defects, given in addition to your rights under the Australian Consumer Law.

Warrantor: MADIMACK PTY LIMITED, ABN 20 602 694 520 — Lvl 1/50 Berry St, North Sydney NSW 2060. Phone: 1300 899 737. Email: support@madimack.com.

Coverage area: This warranty applies only to genuine Madimack products purchased new in Australia and installed in Australia. This warranty applies to residential installations and commercial installations where applicable; see the commercial conditions in the Warranty Schedule.

Consumer Guarantees (Australian Consumer Law)

Our goods come with guarantees that cannot be excluded under the Australian Consumer Law.

You are entitled to a replacement or refund for a major failure and compensation for any other reasonably foreseeable loss or damage.

You are also entitled to have the goods repaired or replaced if the goods fail to be of acceptable quality and the failure does not amount to a major failure.

The benefits given to you by this warranty are in addition to your other rights and remedies under a law in relation to the goods to which this warranty relates. Nothing in this warranty excludes, restricts or modifies those rights and remedies, and they continue to apply after the warranty period ends or if this warranty does not apply.

What's Covered

This warranty covers components that fail because of a manufacturing defect that appears within the warranty period.

Where the law or the product manual requires it, installation, winterisation and repairs must be done by suitably qualified and licensed person(s). Routine owner maintenance, such as cleaning strainer baskets and filters, inspecting and lubricating accessible o-rings, inspecting external plumbing fittings, and maintaining water chemistry within the recommended ranges, may be performed by the owner. Owner maintenance does not include opening cabinets, access panels or electrical control boxes, or working on the sealed refrigeration circuit. That work must be done by suitably qualified and licensed person(s).

Suitably qualified and licensed person(s) — Defined as person(s) who hold any licence, registration or certification that the law of the state or territory where the product is installed requires for that work (for example, electrical or plumbing work).

Typical coverage includes:

- **Pool pumps:** Motor, housing, drivers, shaft seals, or internal components that fail prematurely due to manufacturing defects.
- **Filters:** Filter tank cracks or structural failure due to a manufacturing defect. Filter media, cartridges, and grids are wear items — see Consumable & Wear Items below.
- **Heat pumps:** Heat exchangers, compressors, controls, or other components that fail due to a manufacturing defect.
- **Pool sanitisers:** Controller, cell, and other components that fail due to a manufacturing defect.
- **Robotic pool cleaners:** Motors, drive systems, and electronic components that fail due to a manufacturing defect.

- **Hot water heat pumps:** Electrics, compressors, tanks, or other components that fail due to a manufacturing defect.
- **Chillers:** Heat exchangers, compressors, or other components that fail due to a manufacturing defect.
- **Dehumidifiers:** Heat exchangers, compressors, or other components that fail due to a manufacturing defect.
- **Mowers:** Components that fail due to a manufacturing defect, and consumables for the period shown in the Warranty Schedule.
- **Pool accessories:** Components that fail due to a manufacturing defect.

Warranty periods: Warranty periods for parts and labour vary by product. See the Warranty Schedule (Appendix) for the exact period that applies to your product. For example, if the Warranty Schedule shows 7 years for all parts and 1 year for on-site labour, the parts warranty runs for 7 years and the on-site labour warranty runs for the first year. The warranty periods in the Warranty Schedule are Madimack's express warranty periods. They are separate from, and in addition to, your rights under the Australian Consumer Law.

Warranty Remedy: If a covered defect appears within the warranty period, Madimack will, at its option, repair or replace the defective part or component. If a defect cannot be repaired, Madimack may replace the product with the same or an equivalent model. Repair or replacement of a part, or replacement of the product, does not extend or restart the original warranty period; a replacement carries the balance of the original period. This does not limit your rights under the Australian Consumer Law.

Service calls: There is no charge for a service call to repair a covered defect. If you request a service call and the technician's written inspection report finds no fault with the product, or finds that the problem was caused by something other than a defect in the product (for example, misuse, installation or water chemistry), a call-out fee of $220 AUD, including GST, applies and is payable directly to the technician. The fee will be disclosed to you, and you must accept it, before the visit is booked. You may request a copy of the report. This does not limit your rights under the Australian Consumer Law.

Travel to remote locations: There is no charge for travel for a service visit to repair a covered defect. If you request a service visit that is not for a defect or failure in the product, and the product is installed more than 30 km from the nearest authorised repair agent listed at madimack.com/au/support/service-finder when the visit is booked, Madimack may charge $2 AUD, including GST, per kilometre for the one-way distance beyond 30 km. Madimack will tell you the cost before the visit is booked, and you must accept it before the visit goes ahead. This does not limit your rights under the Australian Consumer Law.

Warranty begins on the date of purchase, and proof of purchase date is required to make a claim.

Product registration is optional. It helps with proof of purchase and faster claims, but it is not a condition of this warranty.

Spare parts and repair: Madimack will take reasonable action to ensure that facilities for the repair of the product, and spare parts for it, are reasonably available for a reasonable period after the product is supplied, as required by the Australian Consumer Law.

Consumable & Wear Items

Consumable and wear items — including o-rings, seals, gaskets, basket strainers, pump mechanical seals, filter cartridges and elements, and cleaner wear parts — are not covered under this warranty except where they show a defect in materials or workmanship at the time of installation. Routine

inspection, lubrication, and replacement of these items is the owner's responsibility as part of normal maintenance. This exclusion applies to this warranty only and does not limit your rights under the Australian Consumer Law. Where the Warranty Schedule shows a warranty period for consumables, that period applies.

Other Terms

This is the only warranty against defects given by Madimack, other than any separate written guarantee that Madimack expressly gives you. No dealer, distributor, installer, or other party is authorised to give any other warranty against defects on Madimack's behalf.

Governing Law: This warranty is governed by the laws of the state or territory of Australia in which the product was purchased, together with applicable Commonwealth law, including the Australian Consumer Law.

Who Is Covered

This warranty extends only to the original retail purchaser, is not transferable to any subsequent owner, and applies only at the product's original installation address.

What's Not Covered

This warranty does not cover defects or damage caused by any of the following. Madimack may decline a claim on these grounds only where the listed cause is shown to have caused the defect or damage. If this warranty does not apply to a claim, your rights under the Australian Consumer Law are not affected:

Installation & Sizing

- Improper installation
- Improper sizing
- Damage occurring during transit, delivery, or installation, prior to startup

Water Chemistry & Environment

- Freezing
- Improper pool water chemistry — corrosion, erosion, scaling, calcification, or other conditions caused by unbalanced water chemistry (for example, corrosion or scaling of cell plates or the heat exchanger)
- Recommended ranges: pH 7.2–7.8 (ideal 7.4–7.6); Total Alkalinity 80–120 ppm (100–150 ppm for vinyl pools); Calcium Hardness 200–400 ppm; Cyanuric Acid 0–100 ppm; Total Dissolved Solids under 1,500 ppm (excluding salt).
- Corrosion or damage to the product caused by a corrosive or contaminated environment (for example, salt air, chemicals stored near the product, debris, vegetation or blocked airflow)

Use, Maintenance & Modifications

- Unauthorised modifications
- Normal wear and tear
- Failure to maintain the equipment
- Damage caused by the use of parts or accessories not authorised by Madimack, or by service performed by anyone other than suitably qualified and licensed person(s) where the law or the product manual requires one

- Damage caused by unauthorised changes to the product's software or firmware
- Operating the product outside its published flow rate, voltage, or environmental specifications
- Faults in other equipment connected to the product (for example, the pool pump, plumbing or power supply)

Accidents & Force Majeure

- Accidental damage, fire, storms, or other acts of God
- Damage from power surges or electrical problems
- Damage caused by running equipment without adequate water flow
- Physical damage, abuse, or negligence
- Damage caused by animals, insects or vermin

Cosmetic Condition

- Product discolouration or other cosmetic or superficial condition, regardless of cause, is not covered by this warranty

How to Make a Warranty Claim

To be entitled to claim: the product must be a genuine Madimack product purchased new in Australia and installed in Australia (and, where the law or the product manual requires installation by suitably qualified and licensed person(s), installed by such a person), its serial number label must be present and legible, the defect must appear within the warranty period, and you must provide the original proof of purchase showing the date of purchase, the product model and the serial number.

Heat pump servicing: Madimack recommends that a heat pump is serviced at least once every 12 months from the date of purchase by suitably qualified and licensed person(s), at your cost, and that you keep the service invoice or service report. If a service is missed, or you cannot provide the service records on request, Madimack may decline claims for defects of a kind that servicing is designed to prevent (for example blockage, corrosion, scaling or contamination of coils, heat exchangers, fans or filters). This does not affect your rights under the Australian Consumer Law.

Proof of installation: where installation by suitably qualified and licensed person(s) is required, proof that the product was installed by such a person: their business name and contact details, their licence or registration number where state, territory or local law requires one, the installation date and the installation invoice or, if the invoice is unavailable, other reasonable proof of installation.

On request, within a reasonable time, you must provide:

- evidence that the installation meets the manual supplied at purchase;
- water chemistry test records, maintenance records and, for heat pumps, annual service records for the period before the fault;
- photos or video of the fault and the serial label;
- access for inspection; and
- the failed part, with a supplied GRA number.

Notify Madimack within a reasonable time after you find the fault, and do not repair, modify or dismantle the product before contacting Madimack. A claim will not be approved until the information is provided. If Madimack asks for it in writing and it is not provided within 30 days of the request, Madimack may decline the claim under this warranty. This does not affect your rights under the Australian Consumer Law.

Safe access: You must make sure the product is in a safe location where it can be inspected, tested and repaired. Madimack and its authorised repair agents may postpone or decline to attend, or may stop work on, a service visit where the site is unsafe (for example, because of unrestrained pets, confined spaces, work at heights, or other environmental hazards). If the product cannot be safely inspected or tested on site, you may be asked to return it to Madimack's testing warehouse, and Madimack may decline the claim until it can be inspected. Madimack covers the cost of freight for returning the product only if Madimack has approved the return in advance. This does not affect your rights under the Australian Consumer Law.

To make a claim: submit a claim through our Support Request page at madimack.com/au/support/servicerequest/productcategory. You can also contact Madimack on 1300 899 737 or support@madimack.com. Your installing dealer may help you lodge a claim, but Madimack assesses all claims.

Consumer guarantee claims: If a product does not meet a consumer guarantee under the Australian Consumer Law, you can contact the retailer you bought it from, or contact Madimack directly using the details above.

What Madimack will do: Madimack will assess your claim and, where the defect is covered, repair or replace the defective part or component as set out under Warranty Remedy. Where a service visit is needed, Madimack will arrange for an authorised repair agent, an independent business engaged by Madimack, to attend. Madimack remains responsible for its obligations under this warranty. If Madimack declines a claim, it will tell you why in writing and give you a copy of the technician's report on request.

A Goods Return Authorisation (GRA) number is required before returning any product or part for warranty evaluation.

Claim Expenses: Under this warranty, Madimack bears the cost of replacement parts; the cost of collecting any part or product that Madimack has approved or asked to be returned (Madimack will arrange collection); and, during the on-site labour period shown for your product in the Warranty Schedule, the labour and the standard service call for a covered defect. Refrigerant is covered where it is needed to repair a covered defect; refrigerant lost for any other reason is not covered. Other consumables are covered only as set out under Consumable & Wear Items. The cost of access to the product for repair, replacement or inspection is not covered by this warranty. This includes moving or lifting the product to an accessible location (for example, a product installed on a roof) and the cost of cranes, scaffolding, elevated work platforms, or removing fences, walls or other obstacles. You can claim the reasonable expenses you incur in making a claim that Madimack is to bear under this warranty by emailing your receipts to support@madimack.com within 30 days of incurring them. Madimack does not pay expenses it has not approved in advance, except where the Australian Consumer Law requires. Madimack may accept later claims at its discretion. This does not limit your rights under the Australian Consumer Law, including your right to have a failure remedied at no cost to you and to be reimbursed reasonable costs where that law provides.

This warranty statement is effective from 1 October 2026. This warranty statement applies to all Madimack products purchased in Australia. If you purchased your product before that date, you are also entitled to the benefit of the warranty in force when you purchased it, and in each case the term that gives you the greater benefit applies. The version supplied with your product, or posted at madimack.com/au at the time of your purchase, is the version in force when you purchased it.

Appendix — Warranty Schedule

Pool Heat Pumps

Heat Pump Model	Heat Exchanger*	Compressor	All Parts	On-Site Labour
InverELITE V4	25 years	15 years	7 years	1 year

InverELITE V3	25 years	10 years	5 years	1 year
ELITE Silent (V2)	25 years	5 years	4 years	1 year
ECO series (pre Jan 2022)	25 years	3 years	2 years	1 year
InverECO	25 years	5 years	3 years	1 year
InverECO Plus	25 years	5 years	3 years	1 year
InverECLIPSE	25 years	5 years	4 years	1 year
InverECLIPSE Plus	25 years	5 years	4 years	1 year
InverELITE Max Series (commercial*)	25 years	5 years	2 years	1 year

*Residential heat pumps installed in public or commercial settings will have their warranty periods reduced to align with the commercial heat pump warranty terms.

Pool Pumps

Pool Pump Model	Warranty	On-Site Labour
InverFLOW Eco	3 years	1 year
InverFLOW Pro	4 years	1 year
InverFLOW Ultra	4 years	1 year
InverFLOW Plus	5 years	5 years
EFlow	4 years	1 year

Pool Sanitisers

Model	Controller & Cell
InverCHLOR	4 years* (*or 10,000 hours, whichever comes first)
pH Doser	1 year

Robotic Pool Cleaners

Robotic Pool Cleaner Model	Warranty
Madimack GT Freedom	3 years
Madimack GT Freedom Plus	3 years
Madimack GT560	2 years

Filters

Model	Tank	Parts	On-Site Labour
eliteCLEAR Media Filter	10 years	1 year	1 year
eliteCLEAR Cartridge Filter	3 years	1 year	1 year

Hot Water Heat Pumps

Model	Electrics	Compressor	Tank	On-Site Labour
resiSTEAM	5 years	3 years	5 years	1 year
resiSTEAM Pro	5 years	3 years	5 years	1 year

Chillers

Unit Model	Heat Exchanger	Compressor	Parts	On-Site Labour
Aquaciat LD	2 years	2 years	2 years	1 year
Aquaciat Power ST & HE LD	2 years	2 years	2 years	1 year

Powerciat LX	2 years	2 years	2 years	1 year

Dehumidifiers

Unit Model	Heat Exchanger	Compressor	Parts	On-Site Labour
Junior BCP	2 years	2 years	2 years	1 year
Aquair BCP	2 years	2 years	2 years	1 year
Air Master BCP	2 years	2 years	2 years	1 year
Aquair Premium BCP	2 years	2 years	2 years	1 year

Mowers

Model	Warranty
Madimack MOWER 750	2 years + 1 year consumables
Madimack MOWER 1500	3 years + 1 year consumables

Pool Accessories

Model	Warranty
Inverter Plus 1100	1 year
Inverter Plus 1500	1 year
Single pump controller (MJ Box)	2 years

Madimack warranty is from date of purchase for service and warranty claims.