S 2000

Maytronics Dolphin robotic pool cleaner

EN

User Instructions

always connected

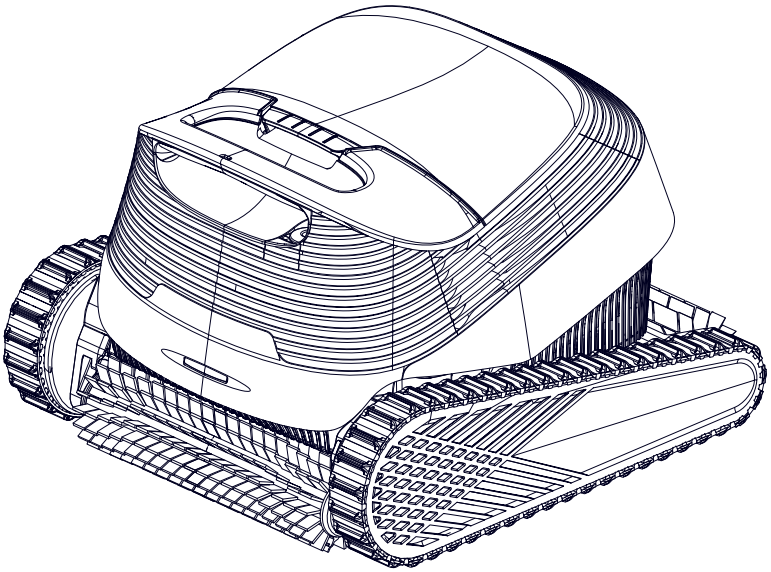

maytronics™ | *Exceptional Experience*

EN

S 2000
Robotic Pool Cleaner
User Instructions

Contents

1. INTRODUCTION 2
2. SPECIFICATIONS 2
3. WARNINGS AND CAUTIONS 2
4. ROBOTIC POOL CLEANER PARTS 4
5. USING THE ROBOT 5
   - 5.1 Setup 5
   - 5.2 Place the Robot in the Water 6
   - 5.3 Robot Indicator Lights 6
   - 5.4 Remove the Robot from the Water 7
6. USE THE MyDolphin™ Plus IOT MOBILE APP 8
   - 6.1 Getting Started with the MyDolphin™ Plus App 8
   - 6.2 Prepare the Pool Cleaner for Connection 8
   - 6.3 Activate the Pool Cleaner Using your Mobile Smart Device 8
   - 6.4 Led Lights 9
7. OFF-SEASON STORAGE 9
8. CLEANING THE FILTER BASKET 10
   - 8.1 Quick Rinse After Removing From Pool 10
   - 8.2 Periodic Filter Cleaning 11
   - 8.3 Clean the Impeller 12
9. TROUBLESHOOTING 13
10. MyDolphin™ Plus - TROUBLESHOOTING 15

1. INTRODUCTION

Thank you for purchasing a Maytronics Robotic Pool Cleaner.
We are sure that your Maytronics Robotic Pool Cleaner will provide you with reliable, convenient and cost-effective pool cleaning.
Its reliable filtration in all pool conditions, active brushing, and all-surface climbing brush enhance maximum pool hygiene.
The Robotic Pool Cleaners by Maytronics deliver advanced cleaning technology, long lasting performance and easy maintenance. You and your family will be free to enjoy swimming with full confidence that your pool is completely clean.

2. SPECIFICATIONS

Chlorine	Max 4 PPM
pH	7.0-7.8 PPM
Temperature	6-35°C / 43-95°F (below 15°C / 59°F climbing performance may be affected)
NaCl	Maximum = 5000 PPM

Robot
Motor protection: IP 68
Minimum depth: 0.4m / 1.33ft
Maximum depth: 5m / 16.4ft

Digital switch-mode power supply
IP 54
Input: North America - 115 VAC, 50-60 Hz
Rest of the World - 100-240 VAC, 50-60 Hz
Output: <30 VDC
Bluetooth®/WiFi® Max tras power 10mW EIRR, 2.4 GHz frequency

This product complies with EU Directives 2014/35/EU, 2014/53/EU, 2014/30/EU, RoHS and REACH.
For full information, please contact us at www.maytronics.com/contact-us-en and ask for the EC declaration of conformity.

3. WARNINGS AND CAUTIONS

IMPORTANT SAFETY INSTRUCTIONS

READ AND FOLLOW ALL INSTRUCTIONS

WARNINGS:

1. Position the power supply at least 3m/10ft from the pool's edge during operation.
2. Always remove the robotic pool cleaner from the pool before people enter the water.
3. Disconnect the power supply before inspecting the robotic pool cleaner.
4. Cleaning and maintenance must not be performed by children. Keep the cleaner out of reach of children or individuals with reduced physical, sensory, or mental capabilities, unless they are supervised or instructed.
5. Use only the original power cord. If damaged, it must be replaced by a certified technician.
6. The power supply must be connected through a residual current device (RCD) with a rated residual operating current not exceeding 30 mA.
   For USA/Canada installations:
   The power supply must be connected only to a supply circuit that is protected by a ground fault circuit interrupter (GFCI). This GFCI should be tested on a routine basis. To test the GFCI, push the test button. The GFCI should interrupt power. Push the reset button. Power should be restored. If the GFCI fails to operate in this manner, the GFCI is defective. If the GFCI interrupts power to the power supply without the test button being pushed, a ground current may be flowing, indicating the possibility of an electric shock. Do not use the power supply. Disconnect the power supply and contact the manufacturer for assistance.
7. To reduce the risk of electric shock, replace a damaged cord immediately.
8. Do not use an extension cord. Ensure a properly located outlet is available.

CAUTIONS:

1. Only trained operators should operate the robotic pool cleaner.
2. Keep hands away from the drive belt mechanism during operation.
3. To prevent electric shock, place the power supply unit at least 11cm/4in above ground level.
4. When lifting the cleaner, take care to avoid back injury. Let the robot drain water at the pool edge before carrying it.
5. Do not bury the cord. Store it safely to prevent damage from lawn mowers, hedge trimmers, or other equipment.
6. Do not use the pool cleaner if liquid flocculants or clarifiers have been added to the pool. These substances can clog or damage the filters.

SAVE THESE INSTRUCTIONS

4. ROBOTIC POOL CLEANER PARTS

▶ Robotic Pool Cleaner Model S2000

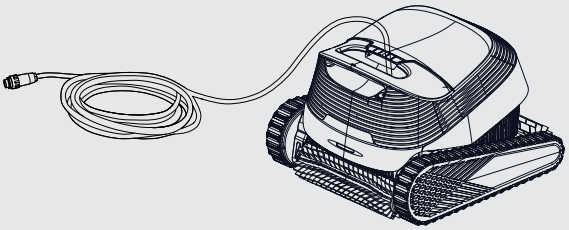

To prevent plastic deterioration:
• Rinse the robot, cable, and filter when removing from pool then place in the shade or under the Caddy cover, which you can acquire on the Maytronics accessories page.
• Remove the robot from the pool whenever chemical shocking.

▶ Power supply

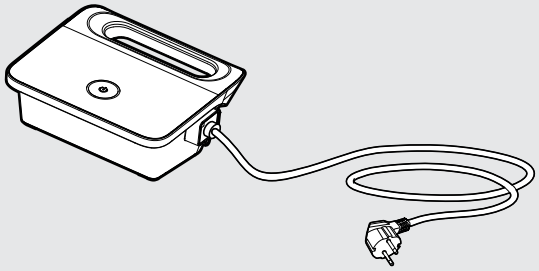

It is splashproof, but we recommend storing it in a dry location during wet seasons as heavy rain can damage it.

▶ Filtration

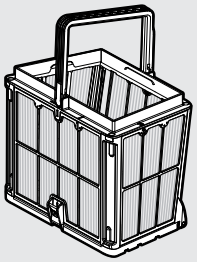

To prolong the filter's lifespan and keep it cleaner, rinse the filter before the debris dries and is much harder to remove.

5. USING THE ROBOT

5.1 Setup

The robot is very simple to use. Place it in the pool and make sure that it is correctly positioned on the floor of the pool.
Turn it ON and enable it to complete the task.
Before using the robot for the first time, perform the following steps:

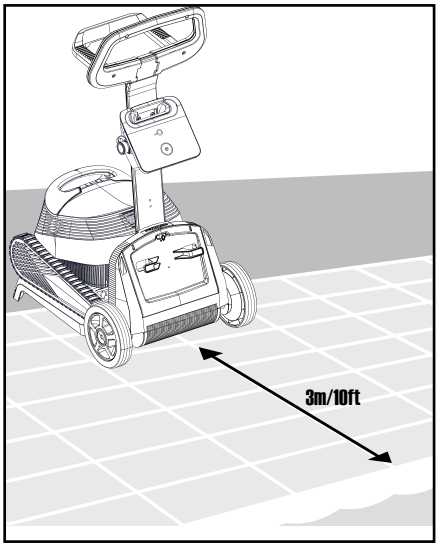

5.1.1 Position the power supply so that it is approximately in the middle of the long side of the pool at a distance of 3m/10ft. Cover or store in a dry location. Heavy rain can damage the power supply.

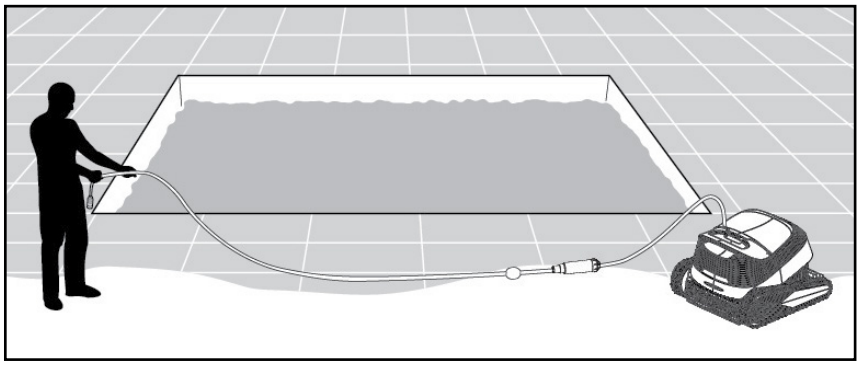

5.1.2 To release cable twists, once a week disconnect the cable from the power supply, straighten it, then coil and reconnect it to the power supply.

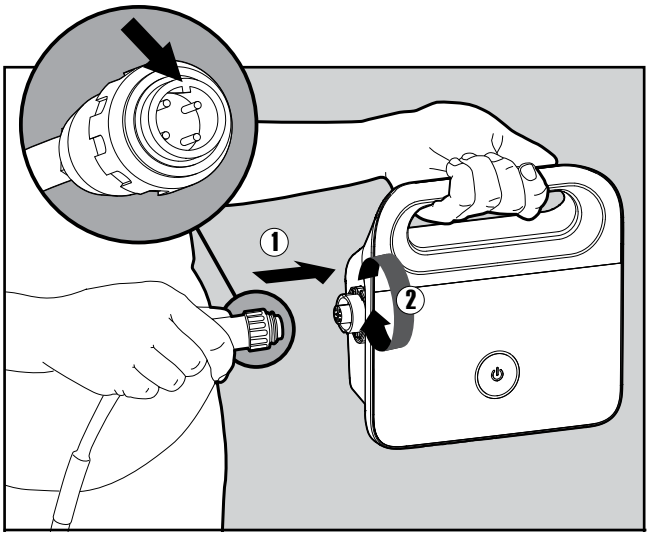

5.1.3 Attach the blue cable to the power supply by inserting it with the tongue on the connector (1) lined up to the groove in the socket on the power supply. Turn it clockwise to seal (2).

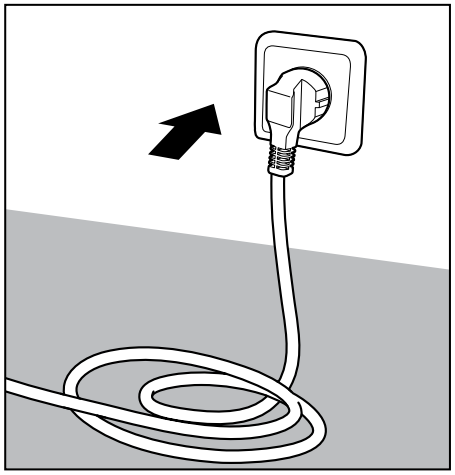

5.1.4 Plug in the power supply and leave it OFF until the robot is in the water.

5.2 Place the Robot in the Water

5.2.1 Place the robot into the pool and let it sink to the floor. Make sure that the blue cable is free of any obstructions.

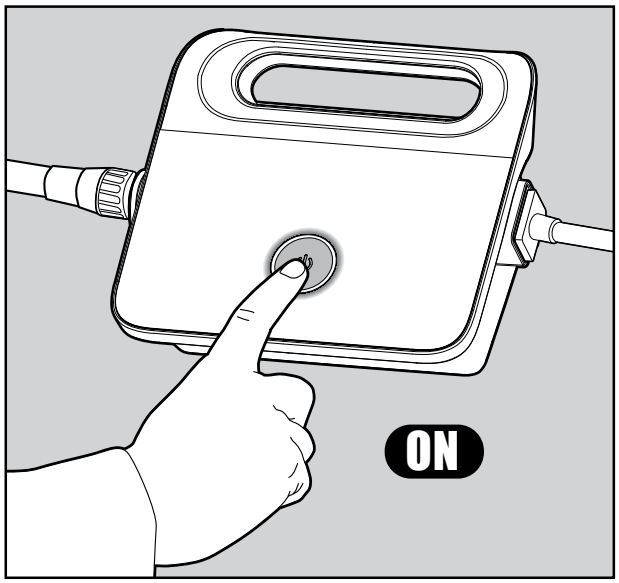

5.2.2 Turn the power supply ON. The robot will now operate until it has reached the end of the cleaning cycle.

To activate the week-long cleaning schedule, long-press the power button until it blinks twice.

The filter will need to be cleaned at the end of the week and the weekly timer will need to be activated again. Remove the robot if chemical shocking the pool to protect the plastic.

You can adjust the power button settings in the app by tapping the 3-dots for the settings menu, then the Power Supply Quick Button. Settings include adjusting weekly schedule and changing the long-press from the default Weekly Timer to Floor-only, or Short cycle, or PickUp mode where the robot climbs its nearest wall. If you've set it to activate the PickUp mode, and if the robot is cleaning, first short-press to end the cycle, then long-press to cause it to climb.

5.3 Robot Indicator Lights

Light	Indication
Blue blinking	Normal operation (additional options available in the app)
Green blinking	Smartphone is communicating with the robot – manual driving navigation
Red blinking	Error (For eligible models only)

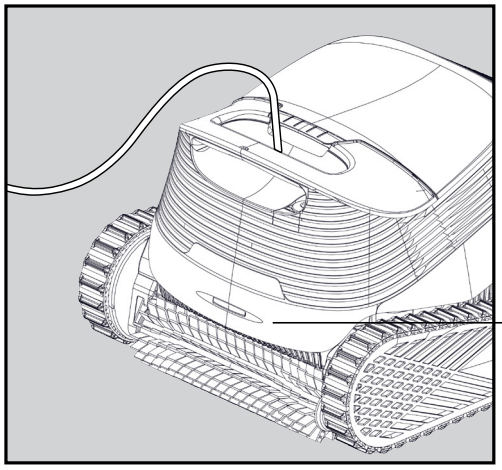

5.3.1 Indicator lights.

5.4 Remove the Robot from the Water

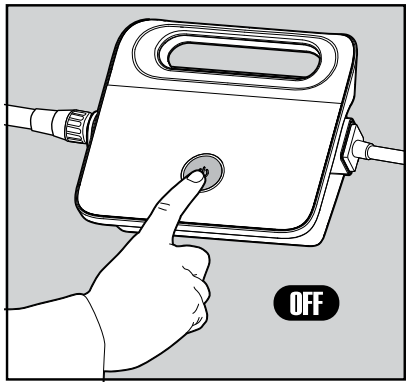

Turn OFF the power supply.

5.4.1

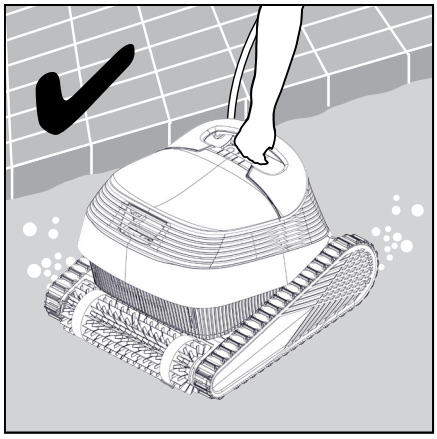

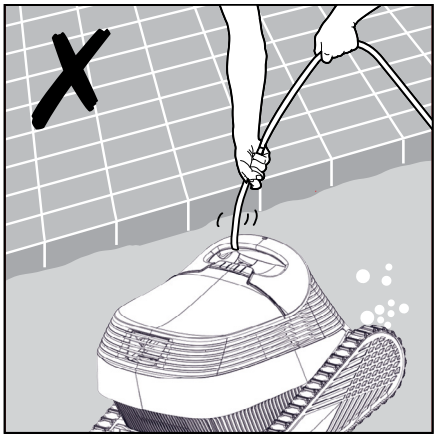

5.4.2 Using the blue cable, bring the Pool Cleaner to the pool edge.
Use the handle to remove the Pool Cleaner from the pool.

Use the blue cable to pull the robot as far as the water surface, then use the handle. Using the cable to pull it above the waterline could damage the connection.

5.4.3 Place the robot on the edge of the pool to let the water drain out.

6. USE THE MyDolphin™ Plus IOT MOBILE APP

Download the Maytronics MyDolphin™ Plus app onto your mobile device from Google Play or Apple's App Store. The Maytronics MyDolphin™ Plus app is cloud-connected, enabling control from anywhere at anytime, with real-time connectivity, as long as it is connected properly to your Wi-Fi® network. Connecting via Wi-Fi® enables features like starting the robot when you're away, faster customer care diagnostics, and more. If you cannot connect via Wi-Fi®, you can connect to and operate the robot via Bluetooth® whenever you're near the power supply.

6.1 Getting started with the MyDolphin™ Plus app

The app is compatible with the following smart devices:

- Apple (iOS) – version 10 and up – iPhone, iPad, iPod
- Android – version 5 and up operating system

1. Make sure your mobile smart device (phone/tablet) is connected to the internet.
2. Make sure you have your Wi-Fi® network name and password in reach.
3. Ensure Bluetooth® is enabled on your smart device.
4. The power supply connects to Wi-Fi® 2.4GHz only. If you have a dual or quad-band router, to prevent connectivity issues, split and give separate names to the 2.4 and 5GHz networks. Consult your internet provider or see online instructions for your specific router brand.
   Note that some routers are 5GHz-only, in which case you can either change routers for full functionality or connect via Bluetooth® when you're near the robot.
5. Android users - please make sure your GPS and Location Services are ON.
6. For iOS 13 only - while the app is working, enable Bluetooth® & location.

6.2 Prepare the pool cleaner for connection

1. Connect the robot to the power supply.
2. The LED light indicator on your power supply will start flashing blue, signifying that the power is ON.
3. Place the robot in the water.
4. Press the ON button on your IoT power supply, to start the robot.

6.3 Activate the pool cleaner using your mobile smart device

1. Activate the MyDolphin™ Plus app while standing near the power supply for the pairing process.
2. Sign up by creating an account or use your Gmail/Facebook accounts.
3. Agree and allow all the required permissions when requested.
4. The app will start pairing with your robot via the power supply. Alternatively, press "Robot not found? Scan its QR code" to pair with your pool cleaner.
5. Wait for the steady blue connectivity LED light signifying Bluetooth® connection and a success message in the app. Click "OK, Next" to name your robot.
6. Connect to your home/pool Wi-Fi® network. Be sure to use the 2.4Ghz option as the 5.0Ghz won't connect to the power supply.
7. Enter the password of your home Wi-Fi® network, and press "Connect".
   After a short while, your power supply will flash green and blue. signifying that Wi-Fi® connection is still in progress.
8. Wait for the steady green connectivity LED light and a success message in the app.

NOTE: Be sure to fill in the warranty details and name your Dolphin pool cleaner for easier service if needed.

6.4 LED Lights

Connectivity LEDs

The connectivity LED light on the power supply has several modes:

1. Flashing **blue** light - waiting for Bluetooth® connection.
2. Steady **blue** light - connected via Bluetooth®.
3. Flashing **green** light - power supply is trying to connect to your home/pool Wi-Fi® network and cloud, or a weak internet signal.
4. Steady **green** light - power supply is now connected to the Wi-Fi® network and to the cloud.
5. Alternating **blue** and **green** light - power supply is connected via Bluetooth® and trying to connect to your home/pool Wi-Fi® network & cloud.

On/Off LEDs

1. Flashing **green** light - waiting for the next operation (delay mode or weekly timer).
2. Alternate **blue**/**green**/**red** lights – program updating remotely.
   Please wait until process is completed.
3. Steady **red** light – fault. Refer to troubleshooting.

Tips

- If the app is stuck on the same screen for over 2 minutes, close the app and re-open it.
- To test your Wi-Fi® signal strength and quality, play a video via your smart device browser.
- Sometimes the app software needs an update.

7. OFF-SEASON STORAGE

If the robotic pool cleaner will not be in use for an extended period of time, perform the following storage steps:

- Unplug the power supply.
- Make sure that no water is left in the robotic pool cleaner.
- Thoroughly clean the filter basket and panels and insert them back in place.
- Roll up the blue cable so that it has no kinks.
- Store the robotic pool cleaner in a protected area out of direct sun/rain/frost, at a temperature of between 5°-45°C / 41°-113°F.

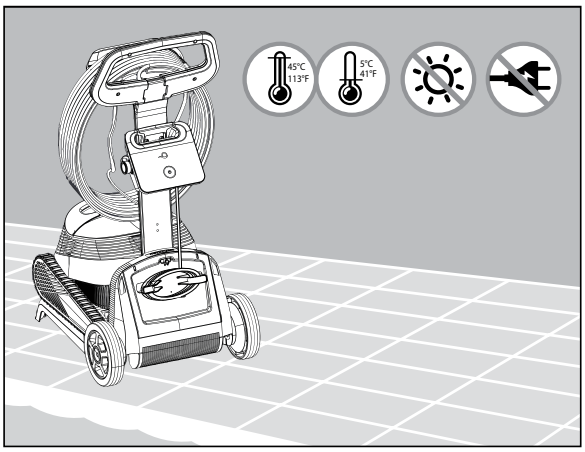

8. CLEANING THE FILTER BASKET

Unplug the power supply before maintaining

8.1 Quick Rinse After Removing From Pool

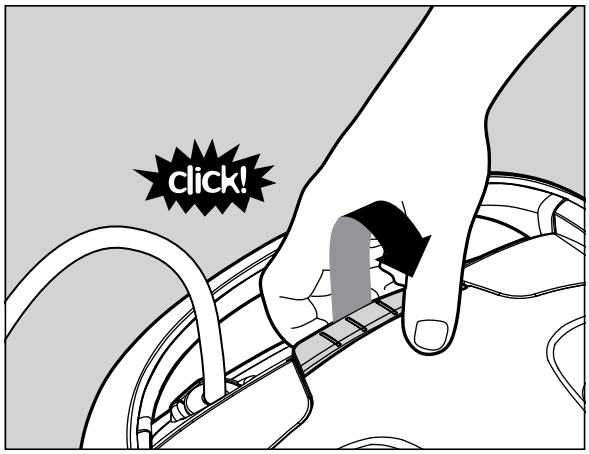

8.1.1 Open the filter cover.

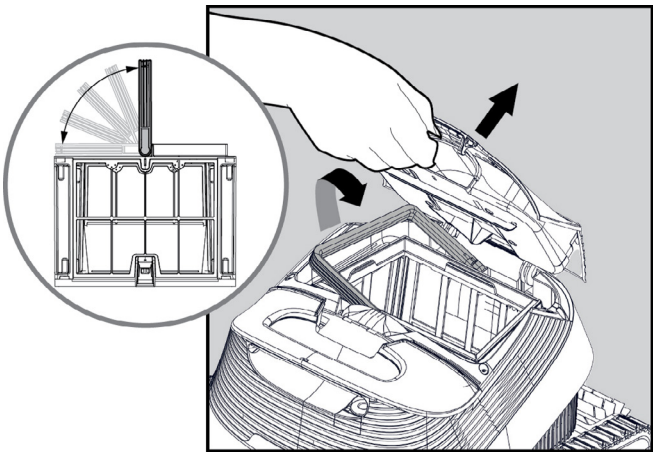

8.1.2 The handle will lift up independently.

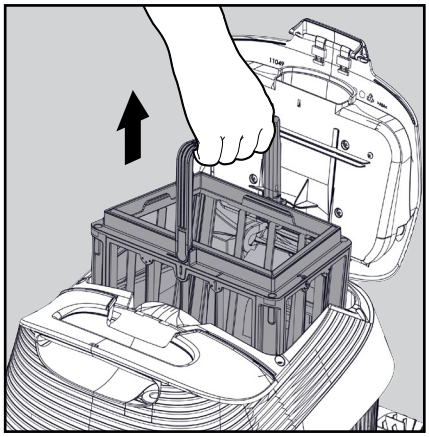

8.1.3 Remove the basket.

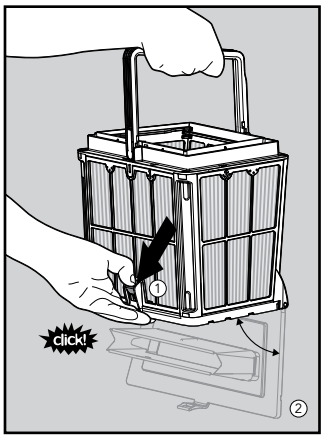

8.1.4 Open the latch to release the bottom lid.

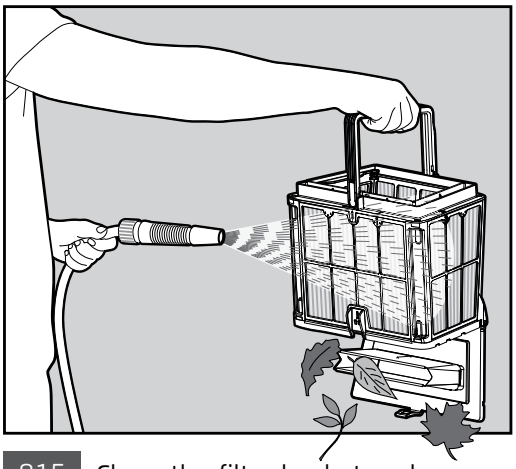

8.1.5 Clean the filter basket and the robot with a hose.

8.2 Periodic filter cleaning

In addition to cleaning after use you should clean the filters periodically.
It is recommended to do this about once a month.
When you perform periodic cleaning, you should first dismantle the 4 ultra-fine filter panels of the outer basket, as per the following steps.

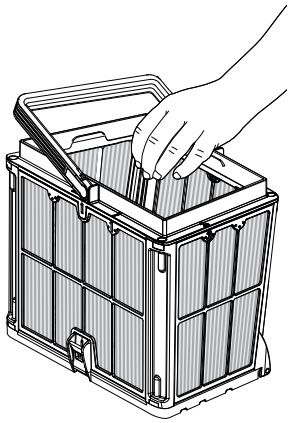

8.2.1 Hold down the handle and remove the inner net basket.

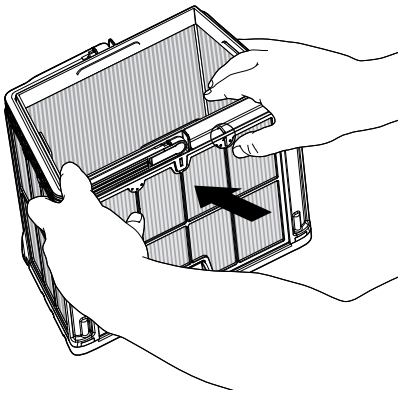

8.2.2 Dismantle the panels using your thumbs to press on panel 1.

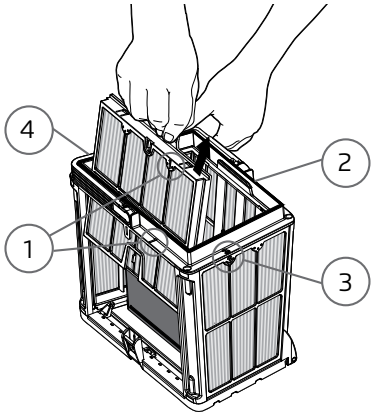

8.2.3 Continue to dismantle panels 2, 3, 4 in the same manner.

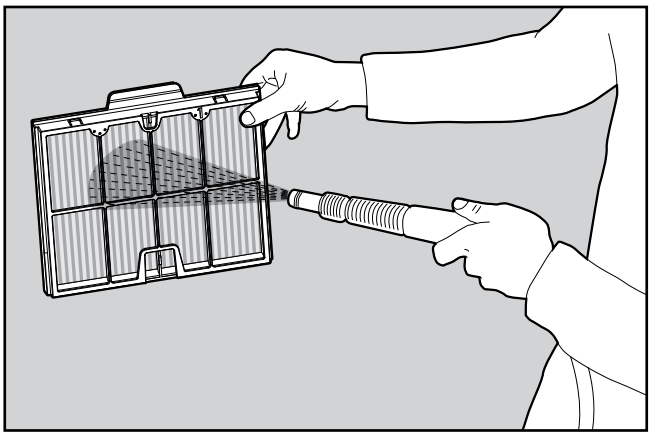

8.2.4 Clean the filter panels with a hose.

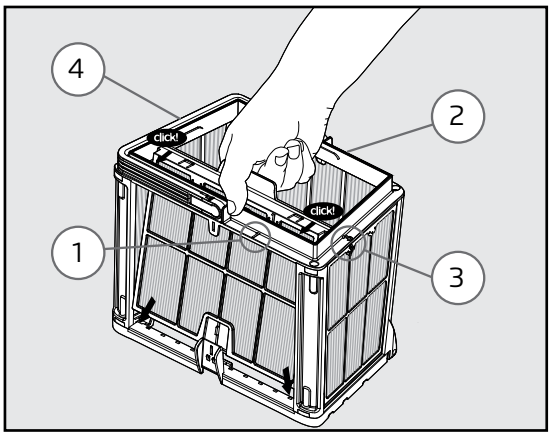

8.2.5 Reassemble the filter panels in the order 4 → 3 → 2 → 1.

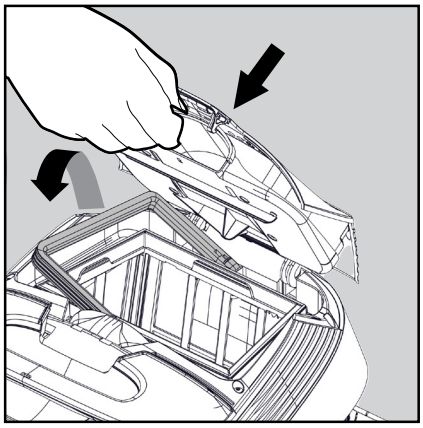

8.2.6 Insert the clean filter basket and close the filter cover.

Do not force the filters into place.

8.3 Clean the Impeller

If there is debris trapped in the impeller or stairs cleaning hose, it should also be cleaned as follows.

Unplug the power supply before maintaining.

Caution: Use a Phillips screwdriver only, not an electric screwdriver.

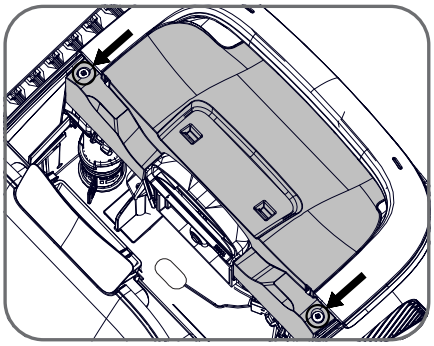

1. Remove 2 screws and remove the cover.

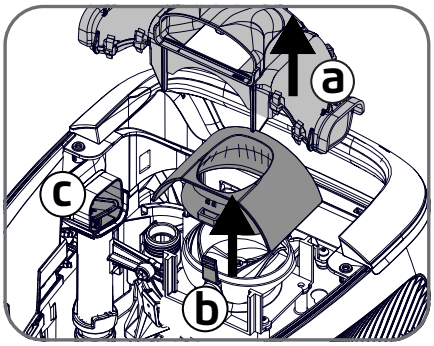

2. a. Remove the exhaust manifold.
   b. Squeeze the two tabs on the sides to remove the servo cap.
   c. Check and clean any debris from the Steps Jet pipe.

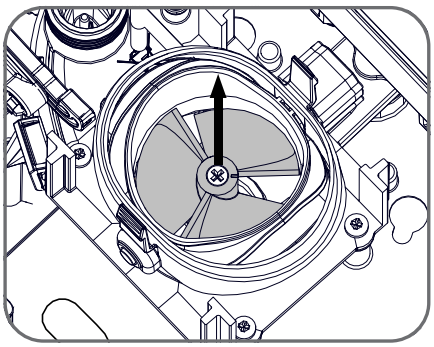

3. **Carefully** remove debris and hair. Use tweezers or small pliers. The impeller blades are sharp. If needed, remove the impeller screw and carefully but assertively lift the impeller out to clean the debris.

9. TROUBLESHOOTING

Unplug the power supply before performing any action.

Symptom	Possible reason	Corrective action
The power supply or its ON/OFF LED are not working.	• No voltage in the power socket in the wall. • The power supply is not ON. • The power cord is not properly connected to the electrical outlet. • The Ground Fault Interrupter is OFF.	• Make sure that there is voltage in the power socket in the wall. • Make sure that the power supply is plugged in and turned ON. • Make sure that the power cord is securely connected all the way into the power supply. • Turn OFF the power supply. Wait 30 seconds, then turn on. • If your wall power outlet has a surge protector with test/reset buttons, push the reset button until it clicks.
The robot does NOT move.	• The blue cable is not properly connected to the power supply outlet. • An obstacle is blocking the impeller, tracks, or wheels.	• Check that the blue cable is securely connected to the power supply. • Unplug the power supply. Open the impeller cover and check that nothing is trapped in the impeller (see illustrations at 8.3). • Verify that nothing blocks the tracks or wheels.
The robot is moving in circles.	• Clogged filter basket. • Debris stuck in the impeller housing or impeller cover. • Power supply incorrectly positioned. • Algae buildup or pool water does not meet specifications.	• Clean the filter basket. • Remove debris stuck in the impeller housing or impeller cover (see illustrations at 8.3). • Place power supply in a position that enables the robotic pool cleaner to freely reach the entire pool area. • Correct pool and water conditions.
The robot moves but does not clean the pool.	• Clogged filter basket. • Debris stuck in the impeller housing or impeller cover. • Front/rear brushes are worn out.	• Clean the filter basket. • Remove debris stuck in the impeller housing or impeller cover (see illustrations at 8.3). • Replace worn out brush.
The robot cleans only part of the pool.	• Power supply incorrectly positioned. • Not enough blue cable is released for the correct operation of the robotic pool cleaner. • The filter gets clogged during the cleaning cycle.	• Place the power supply in a position that enables the robotic pool cleaner to freely reach the entire pool area, while verifying a minimal distance from the pool of 3m/10ft and minimal height above the ground of 11cm/4in. • Check that there is enough slack in the blue cable for the robotic pool cleaner to reach the entire pool. • Clean the filter basket. - If the pool is very dirty, remove the ultra-fine filters (see illustrations 8.2.1 -8.2.6). Rinse them so that debris does not harden on permanently.
The blue cable has kinks.	• The cable got tangled.	• To remove the kinks, stretch the blue cable out completely and let it sit in the sun.
The robot doesn't climb the walls.	• Clogged filter basket. • Algae on walls. • Unsuitable pH level. • Debris stuck in the impeller housing or impeller cover. • Front/rear brushes are worn out or not the right model for smooth pool surfaces.	• Clean the filter basket. • Check the level of chemicals in the water. Improper levels may allow the growth of algae, making the walls slippery. If so, adjust the levels and scrub the walls. • Remove debris stuck in the impeller housing or impeller cover (see illustrations at 8.3). • Replace worn out brush, or purchase combined or wonder rear-brush.

9. TROUBLESHOOTING

Symptom	Possible reason	Corrective action
Can not connect to your Wi-Fi®, and the communication LED on the power supply is blinking green.	• The power supply is too far from the router (weak signal) or your router is not working properly.	• Reset the power supply (disconnect the power cord), and wait 1 min. • Check that your smartphone has a strong Wi-Fi® connectivity near the power supply (try to play any online video streaming application). • Check if the home router is working properly. • Locate the power supply to be as closer as possible to the home router. • Consider installing a Wi-Fi® extender 2.4 GHz to ensure that you have a sufficient signal strength. • The power supply connects to WiFi® 2.4GHz only. If you have a dual-band router, separate the 2.4 and 5GHz networks and give them unique names. You can find instructions for your router brand online or consult your internet provider. • Note: In case the communication LED is still blinking green, you have the option to connect via Bluetooth®.
Cannot connect to your robot via Bluetooth®, and the communication LED on the power supplyh is blinking blue.	• The power supply is too far from the smart device, or your Bluetooth® is disabled, or not working properly.	• Try to turn your smartphone Bluetooth® OFF and then ON. • Get closer to the power supply. • Ensure that you don't have any obstructions or obstacles between you and the power supply. • Turn the power supply OFF and then ON. • If none of the above troubleshooting helps, then contact the dealer for further support.
		• **We highly recommend cleaning the filter basket after each cleaning cycle.**

10. MyDolphin™ Plus - TROUBLESHOOTING

Before using the app, make sure you have a strong Wi-Fi® signal at 2.4GHz. If you have a dual or quad band router, to prevent connectivity issues, split and give separate names to the 2.4 and 5GHz networks. Consult your internet provider or see online instructions for your specific router brand.
If the signal near the power supply is not strong enough to easily stream an online video, consider installing a 2.4GHz Wi-Fi® extender.

Action	What to do
Pool cleaner does not connect to Wi-Fi®, and the power supply is flashing green light.	Power supply is trying to connect to your home/pool Wi-Fi® network and cloud but there's a weak internet signal. 1. If possible, get the power supply closer to the Wi-Fi® source. 2. Consider using a Wi-Fi® extender for a stronger signal.
Second connection after losing router / Wi-Fi®: How to change to Bluetooth® after first Wi-Fi® / 3G connection.	Losing router / Wi-Fi®: 1. Open the app. The "our cloud services seems to be down" message will appear (can take a few seconds) and the globe on the top bar will turn red. 2. Scroll down and click "choose another solution" which will direct you to the Bluetooth® option. (*this solution will be a one-time solution. Note that in order to continue with Bluetooth® connection, the end user must be near the robot). 3. The app will connect to Wi-Fi® automatically when the connectivity returns. If it doesn't reconnect, restart the app. 4. If network interruptions continue, try to improve the quality of the home router signal (move closer to the router, install a Wi-Fi® signal extender, and or split the 2.4 and 5.0GHz bands, give each band a unique name, and connect to the 2.4GHz band (check the internet to see instructions for your specific router, or contact your internet provider).
Initial connection. How to connect with Bluetooth® only.	**Before you start: CONNECT VIA Wi-Fi®, 3G/4G MUST BE OPEN** 1. Plug in the power supply. 2. Connect the robot to the power supply. 3. Download the new MyDolphin™ Plus app. 4. Login to the app and allow the required permissions. 5. Select your robot and name it. 6. Skip the step to connect to Wi-Fi®.
How to change to Wi-Fi® after initial Bluetooth® connection.	1. Make sure your Bluetooth® and Wi-Fi® are enabled. 2. Open the MyDolphin™ Plus app and connect to the robot via Bluetooth®. 3. In the top menu bar, scroll sideways to Settings and click "Wi-Fi® Settings". 4. Follow the app instructions to connect to your home Wi-Fi®.
Changing your Wi-Fi® network.	**Router was replaced** 1. Log into the app → you will see a connection error. 2. Go to "settings" at the top bar on the screen. 3. Go to "Wi-Fi® settings". Follow the app instructions. 4. Simultaneously, the LED color on the power supply will turn solid green (this is the confirmation that the Wi-Fi® is connected).
Power supply replacement for new Wi-Fi® connection.	**New power supply for a robot connected through Wi-Fi®** 1. Turn on the power supply while it is connected to the robot and let it work for several seconds (it will sync with the robot). 2. Login to the app. A connection error message will appear. 3. Follow the app instructions. 4. The power supply LED will flash green.
Motor unit replacement for unit that was not reported to the support system by the technician.	1. Disconnect the power supply from the wall socket before use. 2. After replacing the motor unit (MU), reconnect the power supply to the wall socket and turn on the power supply. Let the robot work for several seconds. 3. Open the MyDolphin™ Plus app. You will see a connection error. 4. Follow the app instructions.

If these solutions do not solve your problem, contact Maytronics Customer Care:

Australia, NZ, South Africa
1 300 693 657
infoau@maytronics.com

For full information and additional troubleshooting please visit us at: www.maytronics.com.au

8159960 REV. 01